VPVO AND VDO FAN ACCESSORIES

VPVO and VDO fan accessory selection table

Fan		Ø 400	Ø 450	Ø 500	Ø 560	Ø 630
Carrier		O-VO-400	O-VO-450	O-VO-500	O-VO-560	O-VO-630
Flange		F-VO-400	F-VO-450	F-VO-500	F-VO-560	F-VO-630
Flexible joint		VVGF-VO-400	VVGF-VO-450	VVGF-VO-500	VVGF-VO-560	VVGF-VO-630
Flexible joint up to 400 °C		VVGF-VO-400 - 400/2	VVGF-VO-450 - 400/2	VVGF-VO-500 - 400/2	VVGF-VO-560 - 400/2	VVGF-VO-630 - 400/2
Hood	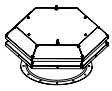	Z-VO-400	Z-VO-450	Z-VO-500	Z-VO-560	Z-VO-630
Roof adapter	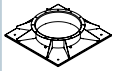	PK-VO-400	PK-VO-450	PK-VO-500	PK-VO-560	PK-VO-630
Mounting curb	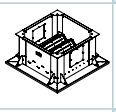	SM-VO-400-450		SM-VO-500	SM-VO-560-630	
Inlet cone		VK-VO-400	VK-VO-450	VK-VO-500	VK-VO-560	VK-VO-630
Backdraft damper		KOM-VO-400 KOM-VO-400-400/2	KOM-VO-450 KOM-VO-450-400/2	KOM-VO-500 KOM-VO-500-400/2	KOM-VO-560 KOM-VO-560-400/2	KOM-VO-630 KOM-VO-630-400/2
Backdraft damper		KOM1-VO-400	KOM1-VO-450	KOM1-VO-500	KOM1-VO-560	KOM1-VO-630
Silencer		SR-400-1D	SR-450-1D	SR-500-1D	SR-560-1D	SR-630-1D
		SR-400-1.5D	SR-450-1.5D	SR-500-1.5D	SR-560-1.5D	SR-630-1.5D
		SR-400-2D	SR-450-2D	SR-500-2D	SR-560-2D	SR-630-2D
Silencer		SRV-400-1D	SRV-450-1D	SRV-500-1D	SRV-560-1D	SRV-630-1D
		SRV-400-1.5D	SRV-450-1.5D	SRV-500-1.5D	SRV-560-1.5D	SRV-630-1.5D
		SRV-400-2D	SRV-450-2D	SRV-500-2D	SRV-560-2D	SRV-630-2D
Protective mesh		SZ-VO-400	SZ-VO-450	SZ-VO-500	SZ-VO-560	SZ-VO-630
Spring-loaded antivibration mount		VVCp-VO*	VVCp-VO*	VVCp-VO*	VVCp-VO*	VVCp-VO*
Rubber antivibration mount		VVCr-VO*	VVCr-VO*	VVCr-VO*	VVCr-VO*	VVCr-VO*

* selection according to the fan weight

Ø 710	Ø 800	Ø 900	Ø 1000	Ø 1120	Ø 1250		Fan
O-VO-710	O-VO-800	O-VO-900	O-VO-1000	O-VO-1120	O-VO-1250		Carrier
F-VO-710	F-VO-800	F-VO-900	F-VO-1000	F-VO-1120	F-VO-1250		Flange
VVGF-VO-710	VVGF-VO-800	VVGF-VO-900	VVGF-VO-1000	VVGF-VO-1120	VVGF-VO-1250		Flexible joint
VVGF-VO-710 - 400/2	VVGF-VO-800 - 400/2	VVGF-VO-900 -400/2	VVGF-VO-1000 - 400/2	VVGF-VO-1120 - 400/2	VVGF-VO-1250 - 400/2		Flexible joint up to 400 °C
Z-VO-710	Z-VO-800	Z-VO-900	Z-VO-1000	Z-VO-1120	Z-VO-1250	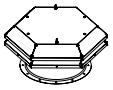	Hood
PK-VO-710	PK-VO-800	PK-VO-900	PK-VO-1000	PK-VO-1120	PK-VO-1250	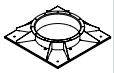	Roof adapter
SM-VO-710-800	SM-VO-900		SM-VO-1000-1120		SM-VO-1250	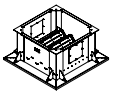	Mounting curb
VK-VO-710	VK-VO-800	VK-VO-900	VK-VO-1000	VK-VO-1120	VK-VO-1250		Inlet cone
KOM-VO-710 KOM-VO-710-400/2	KOM-VO-800 KOM-VO-800-400/2	KOM-VO-900 KOM-VO-900-400/2	KOM-VO-1000 KOM-VO-1000-400/2	KOM-VO-1120 KOM-VO-1120-400/2	KOM-VO-1250 KOM-VO-1250-400/2		Backdraft damper
KOM1-VO-710	KOM1-VO-800	KOM1-VO-900	KOM1-VO-1000	KOM1-VO-1120	KOM1-VO-1250		Backdraft damper
SR-710-1D	SR-800-1D	SR-900-1D	SR-1000-1D	SR-1120-1D	SR-1250-1D		Silencer
SR-710-1.5D	SR-800-1.5D	SR-900-1.5D	SR-1000-1.5D	SR-1120-1.5D	SR-1250-1.5D		
SR-710-2D	SR-800-2D	SR-900-2D	SR-1000-2D	SR-1120-2D	SR-1120-2D		
SRV-710-1D	SRV-800-1D	SRV-900-1D	SRV-1000-1D	SRV-1120-1D	SRV-1250-1D		Silencer
SRV-710-1.5D	SRV-800-1.5D	SRV-900-1.5D	SRV-1000-1.5D	SRV-1120-1.5D	SRV-1250-1.5D		
SRV-710-2D	SRV-800-2D	SRV-900-2D	SRV-1000-2D	SRV-1120-2D	SRV-1120-2D		
SZ-VO-710	SZ-VO-800	SZ-VO-900	SZ-VO-1000	SZ-VO-1120	SZ-VO-1250		Protective mesh
VVCp-VO*	VVCp-VO*	VVCp-VO*	VVCp-VO*	VVCp-VO*	VVCp-VO*		Spring-loaded antivibration mount
VVCr-VO*	VVCr-VO*	VVCr-VO*	VVCr-VO*	VVCr-VO*	VVCr-VO*		Rubber antivibration mount

* selection according to the fan weight

O-VO
carrier

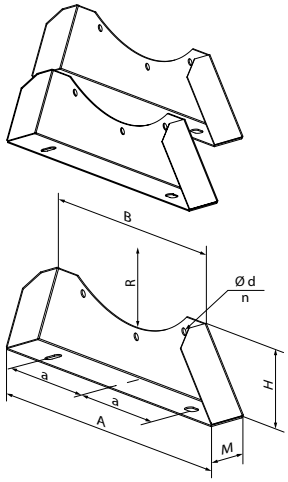

Purpose

Used for mounting the fans to the floor, walls or ceiling.

Design

The carrier consists of two brackets and is made of steel with a polymer coating.

Overall dimensions

Model	Dimensions [mm]								Weight [kg]
	A	B	H	M	a	R	Ød	n	
O-VO-400	510	395	115	45	160	225	8	4	1.15
O-VO-450	560	435	125	45	180	250	8	4	1.3
O-VO-500	610	480	130	45	200	280	12	4	1.4
O-VO-560	670	525	140	45	230	310	12	4	1.6
O-VO-630	740	575	150	45	255	345	12	4	1.8
O-VO-710	820	630	160	45	280	385	12	5	2.0
O-VO-800	910	705	180	45	315	430	12	5	2.35
O-VO-900	1020	795	215	52	360	485	15	5	6.3
O-VO-1000	1120	875	235	52	400	535	15	5	7.2
O-VO-1120	1240	1002	270	52	460	595	15	6	9.1
O-VO-1250	1370	1087	285	52	510	660	15	6	10.25

F-VO
flange

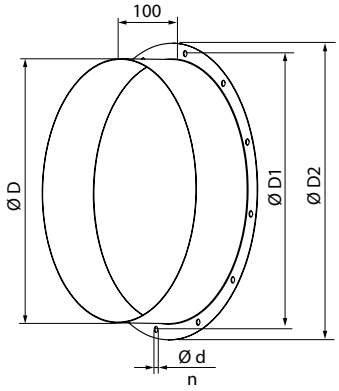

Purpose

Enables attaching round ducts of appropriate size to the fan.

Design

Made of steel with a polymer coating.

Overall dimensions

Model	Dimensions [mm]					Weight [kg]
	ØD	ØD1	ØD2	Ød	n	
F-VO-400	400	450	490	8	12	2.26
F-VO-450	450	500	540	8	12	2.53
F-VO-500	500	560	600	12	12	2.9
F-VO-560	560	620	660	12	12	3.24
F-VO-630	630	690	730	12	12	3.63
F-VO-710	710	770	810	12	16	4.08
F-VO-800	800	860	900	12	16	4.58
F-VO-900	900	970	1015	15	16	5.41
F-VO-1000	1000	1070	1115	15	16	6.0
F-VO-1120	1120	1190	1270	15	20	7.51
F-VO-1250	1250	1320	1400	15	20	8.36

VVGF-VO
VVGF-VO...400/2
flexible joint

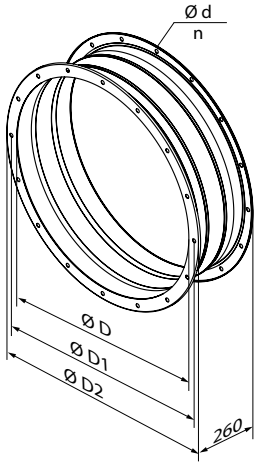

Purpose
Flexible joints cancel out any potential vibrations transmitted by the fans or air handling units to the air ducting as well as partially compensate for the air duct assembly deformations caused by temperature variation.

Design
The flexible joints are formed by two flanges joined with vibration-cancelling material and are made of polymer-coated steel and PVC tape reinforced with polyamide fabric. The joints are not intended to withstand any significant mechanical loads and, therefore, may not be used as load-bearing structures. The VVGF-VO...400/2 joints are designed for operation at a temperature of 400 °C for 2 hours.

Overall dimensions

Model		Dimensions [mm]					Weight [kg]
		ØD	ØD1	ØD2	Ød	n	
VVGF-VO-400	VVGF-VO-400-400/2	400	450	490	8	12	4.76
VVGF-VO-450	VVGF-VO-450-400/2	450	500	540	8	12	5.34
VVGF-VO-500	VVGF-VO-500-400/2	500	560	600	12	12	6.12
VVGF-VO-560	VVGF-VO-560-400/2	560	620	660	12	12	6.83
VVGF-VO-630	VVGF-VO-630-400/2	630	690	730	12	12	7.66
VVGF-VO-710	VVGF-VO-710-400/2	710	770	810	12	16	8.6
VVGF-VO-800	VVGF-VO-800-400/2	800	860	900	12	16	9.67
VVGF-VO-900	VVGF-VO-900-400/2	900	970	1015	15	16	11.4
VVGF-VO-1000	VVGF-VO-1000-400/2	1000	1070	1115	15	16	12.64
VVGF-VO-1120	VVGF-VO-1120-400/2	1120	1190	1270	15	20	15.73
VVGF-VO-1250	VVGF-VO-1250-400/2	1250	1320	1400	15	20	17.52

Z-VO
hood

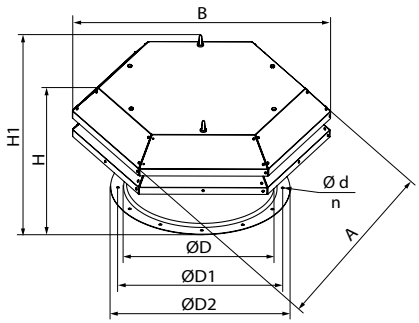

Purpose
Ensures trouble-free operation of fans on rooftops.

Design
Made of steel with a polymer coating.

Overall dimensions

Model	Dimensions [mm]									Weight [kg]
	ØD	ØD1	ØD2	Ød	n	H	H1	A	B	
Z-VO-400	319	350	612	705	400	450	490	8	12	10
Z-VO-450	319	350	672	774	450	500	540			11
Z-VO-500	350	395	742	854	500	560	600	12	12	14
Z-VO-560	350	380	790	910	560	620	660			16
Z-VO-630	359	404	860	991	630	690	730			20
Z-VO-710	420	456	988	1139	710	770	810	12	16	31
Z-VO-800	475	511	1072	1236	800	860	900			42
Z-VO-900	527	572	1189	1370	900	970	1015	15	16	57
Z-VO-1000	640	685	1404	1618	1000	1070	1115			83
Z-VO-1120	655	700	1552	1789	1120	1190	1270	15	20	99
Z-VO-1250	685	730	1707	1968	1250	1320	1400			115

PK-VO
roof adapter

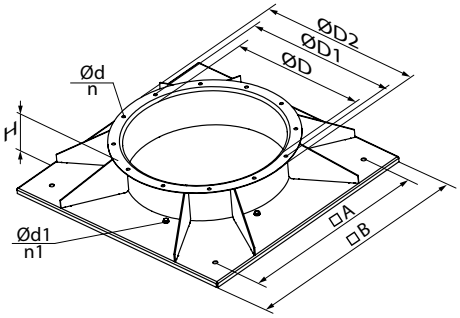

Purpose
Used for mounting VPVO on rooftops.

Design
Made of steel with a polymer coating.

Overall dimensions

Model	Dimensions [mm]										Weight [kg]
	ØD	ØD1	ØD2	Ød	n	Ød1	n1	A	B	H	
PK-VO-400	400	450	490	8	12	7	6	580	701	170	17.5
PK-VO-450	450	500	540	8	12	7	6	580	701	170	16.5
PK-VO-500	500	560	600	12	12	11	6	640	770	170	20.3
PK-VO-560	560	620	660	12	12	11	6	750	920	170	27.2
PK-VO-630	630	690	730	12	12	11	6	750	920	170	25.5
PK-VO-710	710	770	810	12	16	11	8	980	1150	290	53.0
PK-VO-800	800	860	900	12	16	11	8	980	1150	290	51.1
PK-VO-900	900	970	1015	15	16	13	8	1050	1220	290	54.5
PK-VO-1000	1000	1070	1115	15	16	13	8	1340	1510	340	93.4
PK-VO-1120	1120	1190	1270	15	20	13	10	1340	1510	340	91.3
PK-VO-1250	1250	1320	1400	15	20	13	10	1500	1700	340	107.0

VK-VO
inlet cone

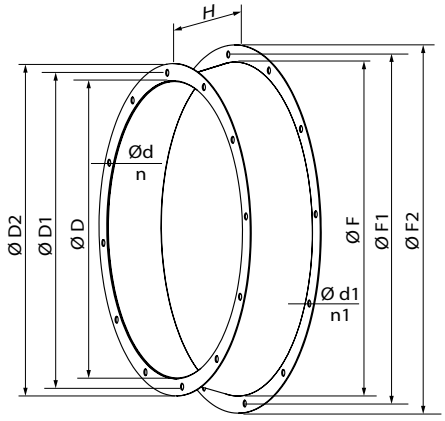

Purpose
The inlet cone is recommended to be installed upstream of the fan to improve the air flow parameters. However, it must be installed in the absence of ducting attached to the fan inlet. The inlet cone helps reduce the fan dynamic pressure and increase the static component of the total fan pressure. The unit can be used in combination with the SZ-VPVO protective mesh which must be one size larger than the unit.

Design
The unit has two flanges and is made of steel with a polymer coating.

Overall dimensions

Model	Dimensions [mm]										Weight [kg]
	ØD	ØD1	ØD2	Ød	n	ØF	ØF1	ØF2	H	Ød1	n1
VK-VO-400	400	450	490	8	12	450	500	540	95	8	12	2.7
VK-VO-450	450	500	540	8	12	500	560	600	110	12	12	3.3
VK-VO-500	500	560	600	12	12	560	620	660	120	12	12	4.0
VK-VO-560	560	620	660	12	12	630	690	730	135	12	12	4.65
VK-VO-630	630	690	730	12	12	710	770	810	150	12	16	6.8
VK-VO-710	710	770	810	12	16	800	860	900	170	12	16	12
VK-VO-800	800	860	900	12	16	900	970	1015	190	15	16	15
VK-VO-900	900	970	1015	15	16	1000	1070	1115	210	15	16	21
VK-VO-1000	1000	1070	1115	15	16	1120	1190	1270	240	15	20	36.7
VK-VO-1120	1120	1190	1270	15	20	1250	1320	1400	255	15	20	45
VK-VO-1250	1250	1320	1400	15	20	1400	1470	1550	285	15	20	53.5

Mounting curb SM-VO



Application

The unit is used for mounting fans on rooftops.

Design

The outer frames are supported for installation on the roof. The mounting curb is equipped with a side inspection door. Modifications are available to order according to the naming system.

VENTS SM-VO-XXXX-XXX/XXX

Standard size, mm
315; 355; 400; 450; 500; 560; 630; 710; 800; 900; 1000; 1120; 1250; 1400; 1600

Damper drive type
0 – no drive; 1 – 24 V drive; 2 – 230 V drive

Built-in damper availability:
0 – no damper; 1 – exhaust damper; 2 – supply damper; 3 – smoke extraction damper

Heat insulation
0 – no heat insulation; 1 – with heat insulation

Roof type
0 – for installation on a roof without a slope; 1 – for installation on a roof with a slope

Series
Mounting curb

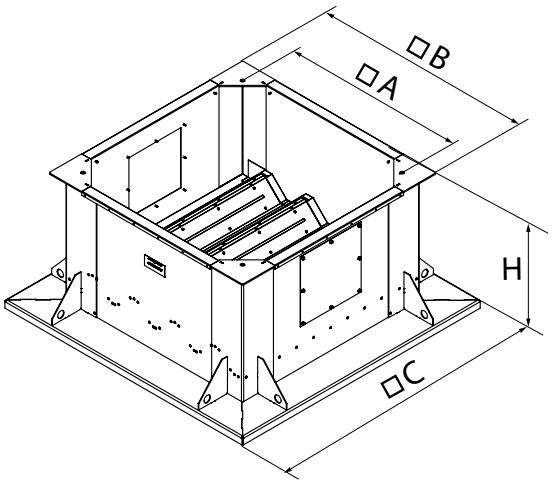

Overall dimensions of the SM-VO mounting curb

Name	Dimensions [mm]				Weight [kg]
	H	A	B	C	
SM-VO-0000-315/355	550	480	590	800	39,5
SM-VO-0010-315/355					43,5
SM-VO-0020-315/355					
SM-VO-0100-315/355					50,5
SM-VO-0110-315/355					54,5
SM-VO-0120-315/355					
SM-VO-0000-400/450		580	692	900	46
SM-VO-0010-400/450					51,5
SM-VO-0020-400/450					
SM-VO-0100-400/450					58,5
SM-VO-0110-400/450					64
SM-VO-0120-400/450					
SM-VO-0000-500		640	760	970	49
SM-VO-0010-500					56
SM-VO-0020-500					
SM-VO-0100-500					63
SM-VO-0110-500					70
SM-VO-0120-500					
SM-VO-0000-560/630		750	910	1120	56,5
SM-VO-0010-560/630					66,5
SM-VO-0020-560/630					
SM-VO-0100-560/630					72,5
SM-VO-0110-560/630					82,5
SM-VO-0120-560/630					
SM-VO-0000-710/800		980	1140	1350	68
SM-VO-0010-710/800					83
SM-VO-0020-710/800					
SM-VO-0100-710/800					88
SM-VO-0110-710/800					103
SM-VO-0120-710/800					
SM-VO-0000-900		1050	1208	1420	71
SM-VO-0010-900					88,5
SM-VO-0020-900					
SM-VO-0100-900					92
SM-VO-0110-900					109,5
SM-VO-0120-900					
SM-VO-0000-1000/1120		1340	1498	1710	85
SM-VO-0010-1000/1120					112
SM-VO-0020-1000/1120					115
SM-VO-0100-1000/1120					111
SM-VO-0110-1000/1120					137
SM-VO-0120-1000/1120					140
SM-VO-0000-1250		1500	1688	1900	112
SM-VO-0010-1250					151
SM-VO-0020-1250					156
SM-VO-0100-1250					140
SM-VO-0110-1250					180
SM-VO-0120-1250					185

KOM-VO
KOM-VO...400/2
backdraft damper

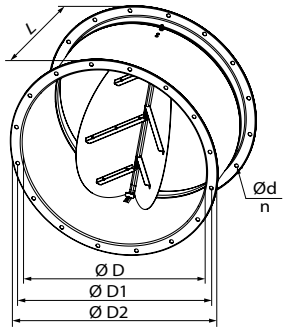

Purpose

The damper is used only for duct systems. The damper is not intended for use in a rooftop configuration. The backdraft damper with spring-loaded blades is used for shutoff of air flow in the air ducts and prevention of air backdraft during standstill of ventilation equipment. The damper blades are opened with the air pressure and closed with the spring. The damper placement in a ventilation system should account for the air flow direction. In case of a horizontal installation of the damper, the pivot axis of the blades must be true horizontal. A vertically installed damper is only suitable for air extraction duty. To aasemble the VDO fans, use the KOM-VO ... 400/2 dampers, which are designed to operate at a temperature of 400 °C for 2 hours.

Design

The unit casing and the two spring-loaded blades are made of polymer-coated steel.

Overall dimensions

Model	Dimensions [mm]						Weight [kg]
	ØD	ØD1	ØD2	Ød	n	L	
KOM-VO-400, KOM-VO-400-400/2	400	450	490	8	12	250	5.4
KOM-VO-450, KOM-VO-450-400/2	450	500	540	8	12	250	6.2
KOM-VO-500, KOM-VO-500-400/2	500	560	590	12	12	250	7.1
KOM-VO-560, KOM-VO-560-400/2	560	620	650	12	12	320	9.6
KOM-VO-630, KOM-VO-630-400/2	630	690	720	12	12	370	14.2
KOM-VO-710, KOM-VO-710-400/2	710	770	810	12	16	390	21.4
KOM-VO-800, KOM-VO-800-400/2	800	860	900	12	16	390	25.4
KOM-VO-900, KOM-VO-900-400/2	900	970	1010	15	16	450	32.6
KOM-VO-1000, KOM-VO-1000-400/2	1000	1070	1110	15	16	450	36.9
KOM-VO-1120, KOM-VO-1120-400/2	1120	1190	1260	15	20	540	59.5
KOM-VO-1250, KOM-VO-1250-400/2	1250	1320	1390	15	20	540	67.4

KOM1-VO
backdraft damper

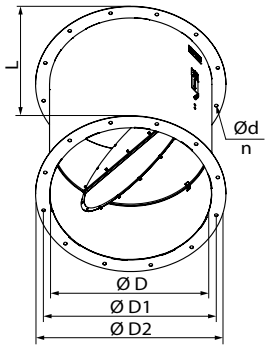

Purpose

The damper is used only for duct systems. The damper is not intended for use in a rooftop configuration. The backdraft damper with a gravity plate is used for supply pressurisation systems and designed for shutoff of air flow during standstill of ventilation equipment. The damper plate opens with the pressure created by the air flow and closes under its own weight, blocking the duct. The KOM1-VO damper is only suitable for air supply duty and must be installed in the vertical position.

Design

The damper is made from polymer coated steel and has a single blade which closes under its own weight.

Overall dimensions

Model	Dimensions [mm]						Weight [kg]
	ØD	ØD1	ØD2	Ød	n	L	
KOM1-VO-400	400	450	490	8	12	500	8.1
KOM1-VO-450	450	500	540	8	12	550	9.8
KOM1-VO-500	500	560	600	12	12	600	14.4
KOM1-VO-560	560	620	660	12	12	660	17.5
KOM1-VO-630	630	690	730	12	12	730	21.4
KOM1-VO-710	710	770	810	12	16	810	26.8
KOM1-VO-800	800	860	900	12	16	900	33.2
KOM1-VO-900	900	970	1015	15	16	1000	53.7
KOM1-VO-1000	1000	1070	1115	15	16	1100	65.0
KOM1-VO-1120	1120	1190	1270	15	20	1220	82.1
KOM1-VO-1250	1250	1320	1400	15	20	1350	100.3

SR
SR...400/2
silencer

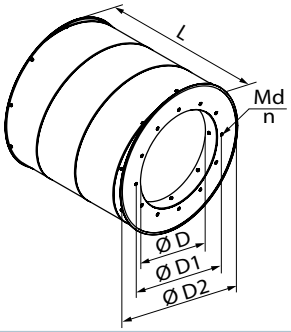

Purpose

The silencer is used for attenuation of the operation noise generated by ventilation equipment and spreaded in the the air ducts. Designed for connection to round air ducts. To complete the VDO fans, it is necessary to use SR...400/2 silencers, which are designed to operate at a temperature of 400 °C for 2 hours.

Design

The casing of the SR silencer made of steel is filled with sound-absorbing material with a protective covering (against fiber blowing).

Overall dimensions

Model			Dimensions [mm]								Weight [kg]		
			ØD	ØD1	ØD2	L (1D)	L (1,5D)	L (2D)	Md	n	(1D)	(1,5D)	(2D)
SR-400-1D, SR-400-1D-400/2	SR-400-1,5D, SR-400-1,5D-400/2	SR-400-2D, SR-400-2D-400/2	400	450	615	407	607	807	M6	12	15	19	22
SR-450-1D, SR-450-1D-400/2	SR-450-1,5D, SR-450-1,5D-400/2	SR-450-2D, SR-450-2D-400/2	450	500	645	457	682	907	M6	12	17	21	25
SR-500-1D, SR-500-1D-400/2	SR-500-1,5D, SR-500-1,5D-400/2	SR-500-2D, SR-500-2D-400/2	500	560	725	507	757	1007	M10	12	21	26	31
SR-560-1D, SR-560-1D-400/2	SR-560-1,5D, SR-560-1,5D-400/2	SR-560-2D, SR-560-2D-400/2	560	620	725	567	847	1257	M10	12	21	27	33
SR-630-1D, SR-630-1D-400/2	SR-630-1,5D, SR-630-1,5D-400/2	SR-630-2D, SR-630-2D-400/2	630	690	815	637	952	1267	M10	12	35	42	60
SR-710-1D, SR-710-1D-400/2	SR-710-1,5D, SR-710-1,5D-400/2	SR-710-2D, SR-710-2D-400/2	710	770	915	717	1072	1427	M10	16	46	58	80
SR-800-1D, SR-800-1D-400/2	SR-800-1,5D, SR-800-1,5D-400/2	SR-800-2D, SR-800-2D-400/2	800	860	1015	807	1207	1607	M10	16	50	61	85
SR-900-1D, SR-900-1D-400/2	SR-900-1,5D, SR-900-1,5D-400/2	SR-900-2D, SR-900-2D-400/2	900	970	1135	907	1357	1807	M12	16	60	75	105
SR-1000-1D, SR-1000-1D-400/2	SR-1000-1,5D, SR-1000-1,5D-400/2	SR-1000-2D, SR-1000-2D-400/2	1000	1070	1265	1007	1507	2007	M12	16	80	105	142
SR-1120-1D, SR-1120-1D-400/2	SR-1120-1,5D, SR-1120-1,5D-400/2	SR-1120-2D, SR-1120-2D-400/2	1120	1190	1315	1127	1687	2247	M12	20	89	117	163
SR-1250-1D, SR-1250-1D-400/2	SR-1250-1,5D, SR-1250-1,5D-400/2	SR-1250-2D, SR-1250-2D-400/2	1250	1320	1415	1257	1882	2507	M12	20	90	117	165

Noise level reduction

The values shown in the tables represent the difference between the sound power level (Lw) of the combination of the fan, the attenuator and the power of one fan.
To determine the sound power level of the fan equipped with a silencer, the insertion loss must be subtracted from the rated sound power level (Lw) of the fan on the mid-frequency spectrum in the octave band given in the fan specifications.

Model	Sound attenuation by frequency band [dB]								L_{WA} [dBA] Sound-power level, A-weighted
	63 Hz	125 Hz	250 Hz	500 Hz	1000 Hz	2000 Hz	4000 Hz	8000 Hz	
SR-400-1D	2	3	5	9	13	10	8	7	17
SR-450-1D	2	3	5	10	13	10	8	7	17
SR-500-1D	2	3	6	10	14	10	8	7	17
SR-560-1D	2	4	6	10	14	10	8	7	17
SR-630-1D	3	4	7	13	14	9	8	6	18
SR-710-1D	3	4	8	14	14	9	7	6	18
SR-800-1D	3	4	8	14	13	9	7	6	17
SR-900-1D	3	4	9	14	13	8	7	6	17
SR-1000-1D	3	4	9	14	12	8	7	6	17
SR-1120-1D	3	4	10	14	12	8	6	6	17
SR-1250-1D	3	4	10	14	12	8	6	6	17

Model	Sound attenuation by frequency band [dB]								L_{WA} [dBA] Sound-power level, A-weighted
	63 Hz	125 Hz	250 Hz	500 Hz	1000 Hz	2000 Hz	4000 Hz	8000 Hz	
SR-400-1,5D	3	5	8	13	17	14	12	10	21
SR-450-1,5D	3	5	8	14	17	14	12	10	21
SR-500-1,5D	3	5	8	14	18	14	12	10	21
SR-560-1,5D	4	6	9	14	18	14	12	10	21
SR-630-1,5D	4	6	9	17	19	13	12	8	22
SR-710-1,5D	4	6	10	18	19	13	11	8	22
SR-800-1,5D	4	6	10	18	18	13	11	8	21
SR-900-1,5D	4	6	11	18	16	11	10	8	20
SR-1000-1,5D	5	6	11	18	16	11	10	8	20
SR-1120-1,5D	5	6	12	18	15	11	9	9	20
SR-1250-1,5D	5	6	12	18	15	11	9	9	20

Model	Sound attenuation by frequency band [dB]								L_{WA} [dBA] Sound-power level, A-weighted
	63 Hz	125 Hz	250 Hz	500 Hz	1000 Hz	2000 Hz	4000 Hz	8000 Hz	
SR-400-2D	4	6	10	16	21	18	15	13	25
SR-450-2D	4	7	10	17	21	18	15	13	25
SR-500-2D	4	7	10	18	21	17	15	12	24
SR-560-2D	5	7	11	18	21	17	15	12	24
SR-630-2D	5	8	11	21	23	17	15	10	26
SR-710-2D	5	8	12	22	23	16	15	10	26
SR-800-2D	5	8	12	22	23	16	15	10	26
SR-900-2D	5	8	13	22	19	13	12	10	23
SR-1000-2D	6	8	13	22	19	13	12	10	23
SR-1120-2D	6	8	13	21	18	13	12	11	23
SR-1250-2D	6	8	13	21	18	13	12	11	23

SRV
SRV...400/2

silencer

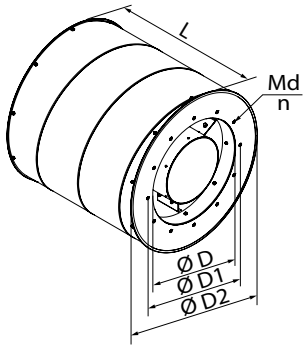

Purpose

The silencer is used for attenuation of the operation noise generated by ventilation equipment and spreaded in the the air ducts. Designed for connection to round air ducts.

Design

The SRV silencer has a polymer-coated steel casing filled with noncombustible material that has a protective coating to prevent fiber deformation. The silencer has an internal sound-absorbing element to increase sound attenuation efficiency.

Overall dimensions

Model			Dimensions [mm]								Weight [kg]		
			ØD	ØD1	ØD2	L(1D)	L(1,5D)	L(2D)	Md	n	(1D)	(1,5D)	(2D)
SRV-400-1D, SRV-400-1D-400/2	SRV-400-1,5D, SRV-400-1,5D-400/2	SRV-400-2D, SRV-400-2D-400/2	400	450	615	407	607	807	M6	12	20	25	29
SRV-450-1D, SRV-450-1D-400/2	SRV-450-1,5D, SRV-450-1,5D-400/2	SRV-450-2D, SRV-450-2D-400/2	450	500	645	457	682	907	M6	12	22	27	31
SRV-500-1D, SRV-500-1D-400/2	SRV-500-1,5D, SRV-500-1,5D-400/2	SRV-500-2D, SRV-500-2D-400/2	500	560	725	507	757	1007	M10	12	30	38	44
SRV-560-1D, SRV-560-1D-400/2	SRV-560-1,5D, SRV-560-1,5D-400/2	SRV-560-2D, SRV-560-2D-400/2	560	620	725	567	847	1257	M10	12	31	38	48
SRV-630-1D, SRV-630-1D-400/2	SRV-630-1,5D, SRV-630-1,5D-400/2	SRV-630-2D, SRV-630-2D-400/2	630	690	815	637	952	1267	M10	12	48	59	81
SRV-710-1D, SRV-710-1D-400/2	SRV-710-1,5D, SRV-710-1,5D-400/2	SRV-710-2D, SRV-710-2D-400/2	710	770	915	717	1072	1427	M10	16	59	77	103
SRV-800-1D, SRV-800-1D-400/2	SRV-800-1,5D, SRV-800-1,5D-400/2	SRV-800-2D, SRV-800-2D-400/2	800	860	1015	807	1207	1607	M10	16	71	89	120
SRV-900-1D, SRV-900-1D-400/2	SRV-900-1,5D, SRV-900-1,5D-400/2	SRV-900-2D, SRV-900-2D-400/2	900	970	1135	907	1357	1807	M12	16	83	101	151
SRV-1000-1D, SRV-1000-1D-400/2	SRV-1000-1,5D, SRV-1000-1,5D-400/2	SRV-1000-2D, SRV-1000-2D-400/2	1000	1070	1265	1007	1507	2007	M12	16	111	146	203
SRV-1120-1D, SRV-1120-1D-400/2	SRV-1120-1,5D, SRV-1120-1,5D-400/2	SRV-1120-2D, SRV-1120-2D-400/2	1120	1190	1315	1127	1687	2247	M12	20	124	164	232
SRV-1250-1D, SRV-1250-1D-400/2	SRV-1250-1,5D, SRV-1250-1,5D-400/2	SRV-1250-2D, SRV-1250-2D-400/2	1250	1320	1415	1257	1882	2507	M12	20	138	182	252

Noise level reduction

The values shown in the tables represent the difference between the sound power level (Lw) of the combination of the fan, the attenuator and the power of one fan.
To determine the sound power level of the fan equipped with a silencer, the insertion loss must be subtracted from the rated sound power level (Lw) of the fan on the mid-frequency spectrum in the octave band given in the fan specifications.

Model	Sound attenuation by frequency band [dB]								L_{wA} [dBA] Sound-power level, A-weighted
	63 Hz	125 Hz	250 Hz	500 Hz	1000 Hz	2000 Hz	4000 Hz	8000 Hz	
SRV-400-1D	4	6	9	14	21	19	16	13	25
SRV-450-1D	4	6	9	15	21	19	16	13	25
SRV-500-1D	4	6	9	15	22	19	15	12	25
SRV-560-1D	4	6	9	15	22	19	15	12	25
SRV-630-1D	4	6	10	18	22	19	15	11	25
SRV-710-1D	5	6	10	18	22	19	15	11	25
SRV-800-1D	5	6	10	18	24	17	15	11	26
SRV-900-1D	5	7	11	20	20	16	13	11	24
SRV-1000-1D	5	7	12	20	19	14	13	10	23
SRV-1120-1D	5	7	12	20	19	14	13	10	23
SRV-1250-1D	5	7	12	20	19	14	13	10	23

Model	Sound attenuation by frequency band [dB]								L_{wA} [dBA] Sound-power level, A-weighted
	63 Hz	125 Hz	250 Hz	500 Hz	1000 Hz	2000 Hz	4000 Hz	8000 Hz	
SRV-400-1,5D	5	8	12	18	25	24	21	18	29
SRV-450-1,5D	5	8	12	19	25	24	21	18	29
SRV-500-1,5D	6	8	12	20	26	24	21	17	30
SRV-560-1,5D	6	8	12	20	26	24	21	17	30
SRV-630-1,5D	6	9	13	23	28	26	22	16	31
SRV-710-1,5D	7	9	13	23	28	25	22	16	31
SRV-800-1,5D	7	9	13	23	29	24	22	16	32
SRV-900-1,5D	7	9	15	24	24	22	18	15	28
SRV-1000-1,5D	7	9	16	24	24	21	18	15	28
SRV-1120-1,5D	7	9	16	24	24	21	18	14	28
SRV-1250-1,5D	7	9	16	24	24	21	18	14	28

Model	Sound attenuation by frequency band [dB]								L_{WA} [dBA] Sound-power level, A-weighted
	63 Hz	125 Hz	250 Hz	500 Hz	1000 Hz	2000 Hz	4000 Hz	8000 Hz	
SRV-400-2D	6	9	14	22	29	28	26	23	34
SRV-450-2D	6	9	14	22	29	28	26	23	34
SRV-500-2D	7	10	14	24	30	29	27	22	35
SRV-560-2D	7	10	14	24	30	29	27	22	35
SRV-630-2D	7	11	16	28	33	32	29	20	37
SRV-710-2D	8	11	16	28	34	31	28	20	37
SRV-800-2D	8	11	16	28	34	31	28	20	37
SRV-900-2D	8	11	18	27	28	27	23	19	33
SRV-1000-2D	8	11	19	27	29	27	23	19	33
SRV-1120-2D	8	11	19	27	28	27	22	17	33
SRV-1250-2D	8	11	19	27	28	27	22	17	33

Pressure drops

Model	Air speed 5 m/s		Air speed 10 m/s		Air speed 15 m/s	
	Air flow [m^3/h]	Pressure drop [Pa]	Air flow [m^3/h]	Pressure drop [Pa]	Air flow [m^3/h]	Pressure drop [Pa]
SRV-400-1D	1900	6	3600	25	5300	66
SRV-450-1D	2200	7	4200	26	6200	68
SRV-500-1D	2900	8	5600	31	8300	67
SRV-560-1D	3400	5	6600	17	9800	44
SRV-630-1D	4600	6	9000	19	13300	41
SRV-710-1D	5300	4	10400	11	15500	25
SRV-800-1D	7200	5	14200	15	21200	38
SRV-900-1D	9600	4	19000	19	28400	57
SRV-1000-1D	8400	4	16500	11	24700	29
SRV-1120-1D	12000	5	23700	17	35500	44
SRV-1250-1D	16300	6	32400	24	48500	58

Model	Air speed 5 m/s		Air speed 10 m/s		Air speed 15 m/s	
	Air flow [m^3/h]	Pressure drop [Pa]	Air flow [m^3/h]	Pressure drop [Pa]	Air flow [m^3/h]	Pressure drop [Pa]
SRV-400-1,5D	1900	9	3600	33	5300	80
SRV-450-1,5D	2200	10	4200	34	6200	82
SRV-500-1,5D	2900	11	5600	40	8300	84
SRV-560-1,5D	3400	6	6600	22	9800	53
SRV-630-1,5D	4600	7	9000	25	13300	52
SRV-710-1,5D	5300	5	10400	14	15500	33
SRV-800-1,5D	7200	6	14200	20	21200	51
SRV-900-1,5D	9600	5	19000	24	28400	72
SRV-1000-1,5D	8400	5	16500	14	24700	36
SRV-1120-1,5D	12000	6	23700	21	35500	56
SRV-1250-1,5D	16300	7	32400	30	48500	75

Model	Air speed 5 m/s		Air speed 10 m/s		Air speed 15 m/s	
	Air flow [m^3/h]	Pressure drop [Pa]	Air flow [m^3/h]	Pressure drop [Pa]	Air flow [m^3/h]	Pressure drop [Pa]
SRV-400-2D	1900	11	3600	40	5300	94
SRV-450-2D	2200	12	4200	41	6200	96
SRV-500-2D	2900	13	5600	48	8300	100
SRV-560-2D	3400	7	6600	27	9800	62
SRV-630-2D	4600	8	9000	30	13300	63
SRV-710-2D	5300	5,5	10400	17	15500	41
SRV-800-2D	7200	6,5	14200	24	21200	63
SRV-900-2D	9600	6	19000	29	28400	87
SRV-1000-2D	8400	6	16500	16	24700	43
SRV-1120-2D	12000	6	23700	24	35500	67
SRV-1250-2D	16300	8	32400	36	48500	91

SZ-VO
protective mesh

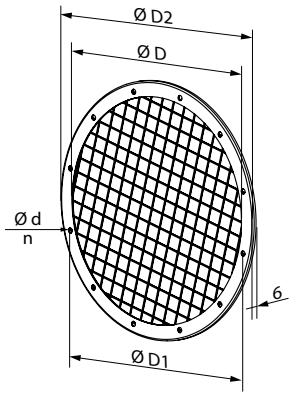

Purpose
Protects the fans against ingress of foreign objects.

Design
Protective mesh with 25x25 mm cells.

Overall dimensions

Model	Dimensions [mm]					Weight [kg]
	ØD	ØD1	ØD2	Ød	n	
CZ-VO-400	400	450	490	8	12	1.28
CZ-VO-450	450	500	540	8	12	1.45
CZ-VO-500	500	560	600	12	12	1.77
CZ-VO-560	560	620	660	12	12	2.00
CZ-VO-630	630	690	730	12	12	2.28
CZ-VO-710	710	770	810	12	16	2.59
CZ-VO-800	800	860	900	12	16	2.97
CZ-VO-900	900	970	1015	15	16	3.83
CZ-VO-1000	1000	1070	1115	15	16	4.32
CZ-VO-1120	1120	1190	1270	15	20	6.20
CZ-VO-1250	1250	1320	1400	15	20	7.03

VVCp-VO
Spring-loaded antivibration mount

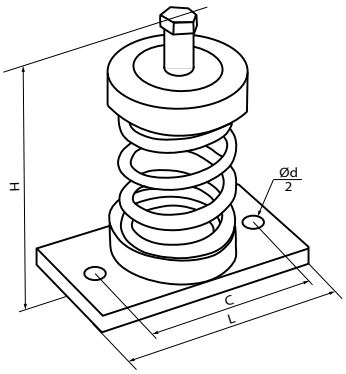

Purpose
The antivibration mounts VVCp-VO are used for attenuation of noise and vibration generated by ventilation equipment. The antivibration mounts reduce dynamic loads, increase reliability and durability of ventilation equipment. Four antivibration mounts are required to complete one fan.

Overall dimensions

Model	Load [kg]	Dimensions and mounting holes [mm]				
		L	H	C	Ød	Width
VVCp-VO-1	7	105	70	82	10,5	58
VVCp-VO-2	15					
VVCp-VO-3	24		80			
VVCp-VO-4	29		90			
VVCp-VO-5	35		113			
VVCp-VO-6	50					
VVCp-VO-7	80					
VVCp-VO-8	120					

VVCr-VO
Rubber antivibration mount

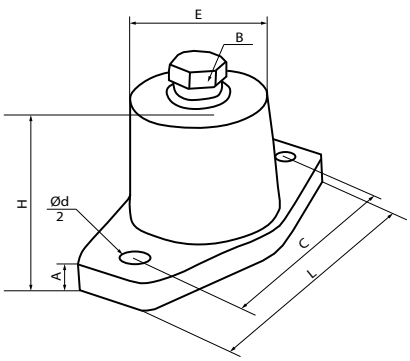

Purpose
The rubber antivibration mounts VVCr-VO are used for attenuation of noise and vibration generated by ventilation equipment.
The antivibration mounts reduce dynamic loads, increase reliability and durability of ventilation equipment. Four antivibration mounts are required to complete one fan.

Overall dimensions

Model	Load [kg]	Dimensions and mounting holes [mm]						
		A	B	C	Ød	E	L	H
VVCr-VO-1	5-35	5	M8	60	9	Ø30	80	40
VVCr-VO-2	35-80	10	M10	76	11	Ø40	105	52
VVCr-VO-3	50-120	10	M10	76	11	Ø45	105	52

Ventilation systems produce a heavy load on the electrical systems of a building. Therefore, reducing the power consumption is among the top priorities for construction project designers.

Direct on-line starting (DOL)

As a rule, smoke extraction systems utilize large high-performance fans. During starting the high inertia of the shaft causes a substantial increase in the start-up time - i.e. the time from the application of power to reaching the rated speed. As a result the motor is subjected to high starting current for a prolonged period of time.

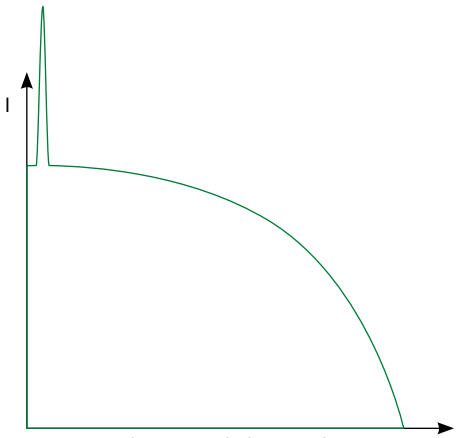

Current diagram with direct on-line starting

Standard switchgear (automatic circuit breakers, contactors and motor starters) is not designed to withstand prolonged overloads causing the fan to shut down automatically during starting.
Using switchgear with a higher maximum current rating renders the electric motor protection system less sensitive.
As a result the switchgear will not be able to detect motor overload in time due to a higher current sensing threshold.
Such challenges can only be addressed by utilizing a soft starter or a frequency converter to start the fan without causing a prolonged overload.

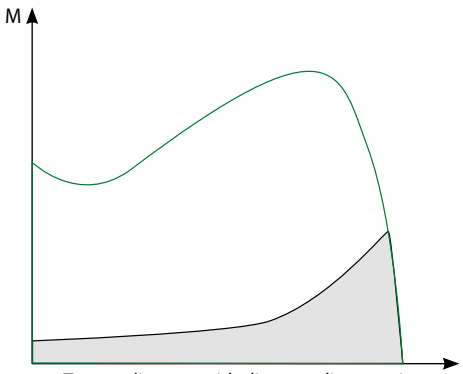

Torque diagram with direct on-line starting

Frequency converter

A frequency converter (FC) consists of two main component blocks. One converts alternating current (50 or 60 Hz) into direct current.
The other converts direct current into alternating current of variable frequency ranging from 0 to 250 Hz.
By controlling the frequency output the FC offers a broad range of motor speed regulation.

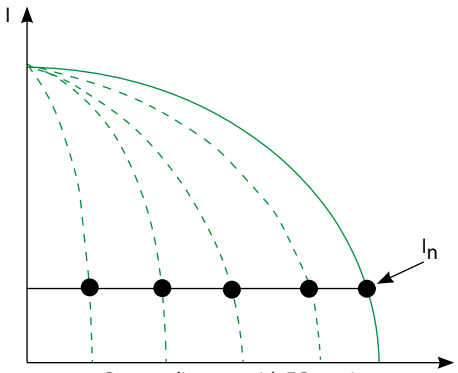

Current diagram with FC starting

During the starting the FC raises the frequency from 0 Hz to the electrical mains frequency (50 or 60 Hz).
As the frequency is increased gradually, the motor can be assumed to operate at its nominal speed for a given frequency value.
Furthermore, on the assumption that the motor runs at its nominal speed the nominal torque should be immediately available whereas the current will be approximately equal to the nominal value.

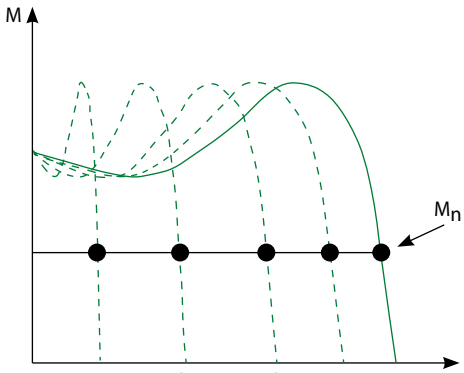

Torque diagram with FC starting

Soft starter

Unlike an FC, a soft starter does not change the frequency of speed.
Instead it gradually increases the voltage supplied to the motor - from the initial level to the nominal level.

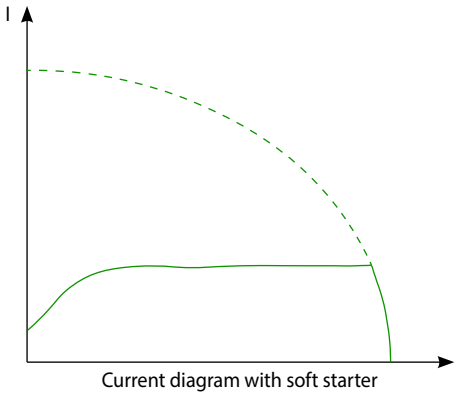

Current diagram with soft starter

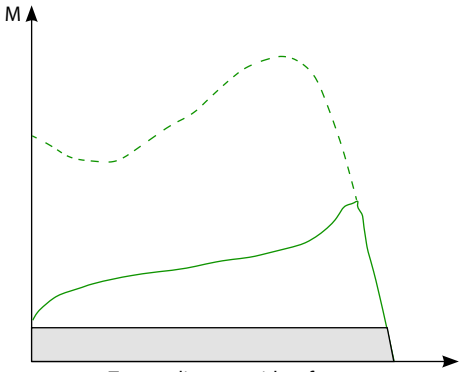

Torque diagram with soft starter

The very low voltage initially supplied to the motor during starting helps avoid sudden jolts.
Both voltage and torque increase gradually.

Applications in ventilation systems

Using an FC or a soft starter allows to reduce the starting current thereby avoiding a loss of voltage in the electrical mains.
In addition to that the starting torque and mechanical strain on equipment are also reduced which translates into extended maintenance and repair intervals.
General exhaust ventilation (GV) systems and emergency smoke extraction (SE) systems of car parks, warehouses, utility and industrial spaces can be integrated into a single system at the design level.
As the air flow rate a GV system is considerably lower than that in an SE system a high-capacity fan rated for smoke extraction duty runs in partial load mode.
Frequency converters can be programmed for several fixed-speed settings to enable operation in GV and SE modes.
The fan operating modes can be switched upon receiving an external signal from the control system.
Such integration of ventilation systems allows overall cost savings.

FC-51 and FC-101: when to use?

This catalogue features two series of frequency converters: FC-51 and FC-101.
The FC-51 series is only suitable for general ventilation systems.
If intended for a smoke extraction system, the fans should be fitted with the FC-101 series units as they feature an integrated fire mode.
When activated the integrated protection equipment of the frequency converter is overridden enabling the unit to continue operation despite the possibility of sustaining irreparable damage due to overheating or overloading.
In case of a fire, the FC-101 series frequency converters are capable of maintaining a higher air pressure level at landings compared to other areas of the building in order to keep the landings smoke-free.

Micro Drive FC-51

frequency converter



Purpose

This general-purpose variable frequency drive is designed for regulating the rotation speed of an AC electric motor with a maximum power output of 22 kW.
This unit is only suitable for general ventilation systems.

Features

The drive construction prevents forced air flow passage through its internal electronic components.
The internal circuit boards of are well-protected.

Filter

The unit features an integrated HF filter which blocks RF interference from the motor and enables the use of a shielded cable up to 15 m long or unshielded cable up to 50 m long as per the applicable EU regulations.

Inputs and outputs

- 5 programmable digital inputs
- PNP/NPN logic
- 20-5000 Hz pulse input
- One 0-10 V or 0-20 mA analogue input
- One 0-20 mA analogue input
- Thermistor input (analogue or digital)
- 1 analogue output
- 1 relay, 240 V, 2 A
- RS 485
- MODBUS RTU

Installation

Back-to-back installation for space savings. Thanks to a compact design the drives can be mounted immediately next to one another without any performance penalties.



Control panels

Designation	Code
VLT control panel LCP 11 (without potentiometer)	132B0100
VLT Control Panel LCP 12 (with potentiometer)	132B0101



Designation	Code
Remote panel mounting kit	132B0102

Frequency converter type and order code

Three-phase, 380-480 V			
Power [kW]	**Rated current [A]**	**Order code**	**Block type**
0.37	1.2	132F0017	M1
0.75	2.2	132F0018	M1
1.5	3.7	132F0020	M2
2.2	5.3	132F0022	M2
3.0	7.2	132F0024	M3
4.0	9.0	132F0026	M3
5.5	12.0	132F0028	M3
7.5	15.5	132F0030	M3
11.0	23.0	132F0058	M4
15.0	31.0	132F0059	M4
18.0	37.0	132F0060	M5
22.0	43.0	132F0061	M5

Outside dimensions (including mounting ledge)

mm	M1	M2	M3	M4	M5
Height	150	176	239	292	335
Width	70	75	90	125	165
Depth	148	168	194	241	248

+ 6 mm with potentiometer

Basic Drive FC-101

frequency converters



Purpose

This general-purpose variable frequency drive is designed for regulating the rotation speed of an AC electric motor with a maximum power output of 90 kW.
This drive is suitable for both general ventilation and smoke extraction ventilation systems.

Certified fire mode

The fire mode prevents the drive from a self-protecting shut-down. While in this mode the drive continues to perform speed regulation duty for mission-critical fans irrespective of control signals, warnings and alarms which may otherwise force it shut down.

Filter

A built-in throttle on the DC link ensures a low harmonic load on the power mains as per the EN 61000-3-12 standard requirements.

Inputs and outputs

- Four PNP or NPN programmable digital inputs, 0-24 V DC
- 2 analogue inputs (0-10 V or 0/4-20 mA)
- 2 analogue outputs (0/4-20 mA)
- 2 relay outputs
- MODBUS RTU (RS 485)
- BACnet MSTP
- FC Protocol
- N2 Metasys
- FLN Apogee

Installation

Thanks to an ultra-compact design the drive can be easily fitted into a larger unit or panel of an air ventilation system. The casings are rated IP20/ Type 1/IP21 (optional) and IP54.

Frequency converter type and SKU code

Power	Current	VLT® FC 101 HVAC Basic Drive 0.37-90 kW (3 x 380 – 480 V~, without a braking transistor)			
0.37	1.2	-	131L9861	-	-
0.75	2.2		131L9862	131N0177	131N0178
1.5	3.7		131L9863	131N0179	131N0180
2.2	5.3		131L9864	131N0181	131N0182
3	7.2		131L9865	131N0183	131N0184
4	9.1		131L9866	131N0185	131N0186
5.5	12		131L9867	131N0187	131N0188
7.5	15.5		131L9868	131N0189	131N0190
11	23		131L9869	131N0191	131N0192
15	31		131L9870	131N0193	131N0194
18	37		131L9871	131N0195	131N0196
22	42.5		131L9872	131N0197	131N0198
30	61	131L9873	131L9875	131N0201	131N0202
37	73	131L9881	131L9883	131N0205	131N0206
45	90	131L9889	131L9891	131N0209	131N0210
55	106	131L9897	131L9899	131N0213	131N0214
75	147	131L9905	131L9907	131N0217	131N0218
90	177	131L9913	131L9915	131N0221	131N0222
Casing		(E20) IP20/Chassis	(E20) IP20/Chasis	IP54	IP54
EMC filter		(H2) RFI class A2 (for industrial areas)	(H3/H4) RFI class A1/B (for residential areas)	(H2) RFI class A2 (for industrial areas)	(H3) RFI class A1/B (for residential areas)
Control panel		(X) without panel	(X) without panel	Integral	Integral

VLT® HVAC Basic frequency converters rated up to 22 kW are fitted with circuit boards with a special class 3C3 protective coating. For frequency converters rated higher than 22 kW this protective coating is optional while , the 3C2 coating is standard.

VLT® FC 101 HVAC Basic Drive frequency converter options

Order code	Description
132B0200	Operator's digital panel
132B0201	Kit for remote mounting of the operator panel to an IP55 cabinet, including 3 m cable
132B0202	Decoupling plate for H1 and H2 standard sizes
132B0204	Decoupling plate for H3 standard size
132B0205	Decoupling plate for H4 and H5 standard sizes
132B0207	Decoupling plate for H6 standard size
132B0242	Decoupling plate for H6 standard size (extra large)
132B0208	Decoupling plate for H7 standard size

Order code	Description
132B0243	Decoupling plate for H7 standard size (extra large)
132B0209	Decoupling plate for H8 standard size
132B0244	External EMC filter class A1/B1 for power output from 0.37 to 2.2 kW
132B0245	External EMC filter class A1/B1 for power output from 3 to 7.5 kW
132B0246	External EMC filter class A1/B1 for power output from 11 to 15 kW
132B0247	External EMC filter class A1/B1 for power output from 18.5 to 22 kW