100 Base T



Axial extract high-performance fans, compatible with the Design decorative panels

- Sound pressure level LpA at 3 m: 34
- Impeller type: Axial
- Casing material: Plastic
- Timer: Turn off timer

	Unit of measurement	100 Base T
Connected air duct size	mm	100
Phases	-	1
Maximum supply voltage	V	240
Minimum supply voltage	V	220
Power supply frequency	Hz	50/60
Rated power	W	14
Unit current	A	0.09
Maximum airflow	m³/h	100
Rotation speed at 50hz	-	2300
Sound pressure level LpA at 3 m	dB(A)	34
Ambient air temperature min	°C	1
Ambient air temperature max	°C	40
Ingress protection rating	-	IP24
Impeller material	-	Plastic

Dimensions

ØD	B	L	L1
99	140	88	13

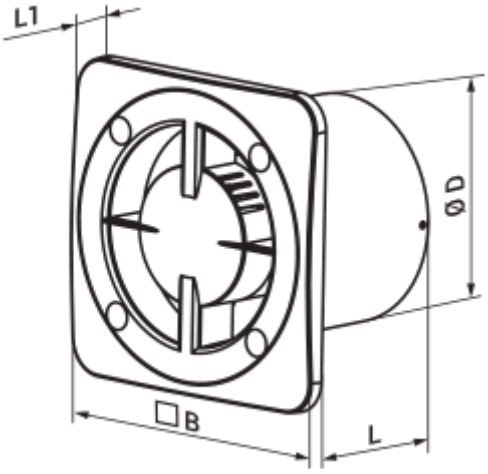
L1
ØD
□B
L

Ecodesign

Trademark	Vents					
Model	100 Base T					
Specific energy consumption (SEC) (kWh/(m²/a))	Cold		Average		Warm	
	-29.2	B	-12.8	E	-3.4	F
Type of ventilation unit	Unidirectional					
Type of drive installed	Single speed					
Type of heat recovery system	None					
Maximum flow rate (m³/h)	100					
Electric power input (W)	14					
Reference flow rate (m³/s)	0.019					
Specific power input (SPI) (W/(m³/h))	0.14					
Control typology	Manual control					
Maximum external leakage rates (%)	2.7					
Declared typology	RVU UVU					
Sound power level (dB(A))	54					
The annual electricity consumption (AEC) (kWh/a)	Cold		Average		Warm	
	175		175		175	
The annual heating saved (AHS) (kWh/a)	Cold		Average		Warm	
	3355		1715		776	