100 F turbo



Axial extract fans with extra grilles

- Sound pressure level LpA at 3 m: 37
- Casing material: Plastic

	Unit of measurement	100 F turbo
Connected air duct size	mm	100
Phases	-	1
Minimum supply voltage	V	220
Maximum supply voltage	V	240
Power supply frequency	Hz	50/60
Rated power	W	16
Unit current	A	0.1
Maximum airflow	m^3/h	128
Rotation speed at 50hz	-	2300
Sound pressure level LpA at 3 m	dB(A)	37
Weight	kg	0.72
Ambient air temperature min	°C	1
Ambient air temperature max	°C	40
Ingress protection rating	-	IP34
Impeller material	-	Plastic

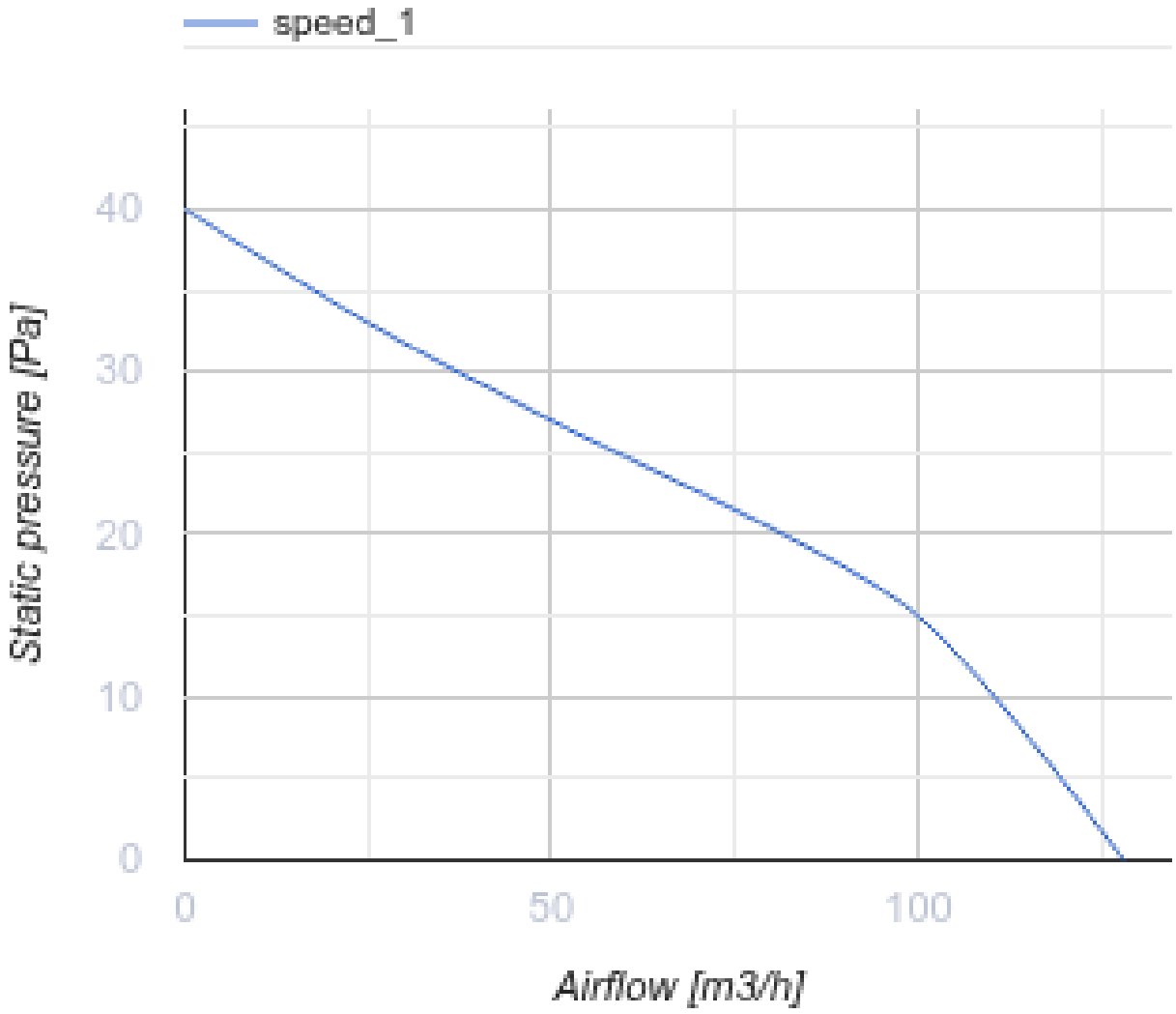

Dimensions

Ø D	B	B1	B2	H	H1	L	L1
100	182	152	160	252	226	104	13

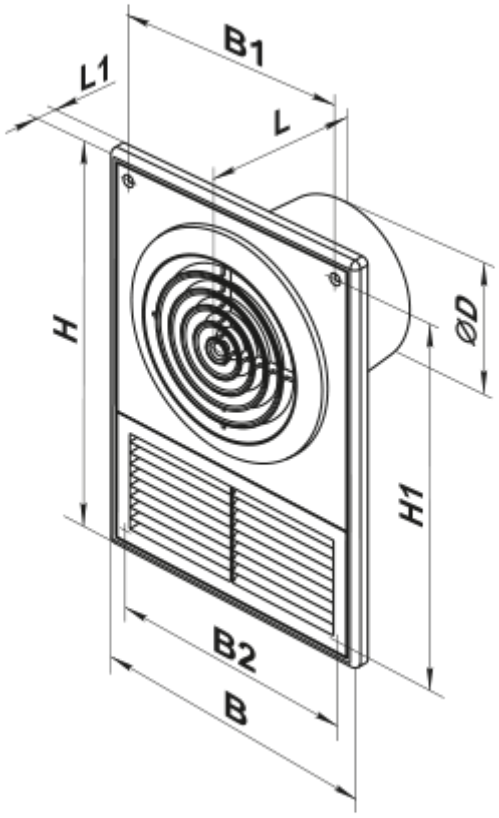

Accessories

Flanges

Name	Photo	Description
FO 100		The window flange

Ecodesign

Trademark	Vents					
Model	100 F turbo					
Specific energy consumption (SEC) (kWh/(m²/a))	Cold		Average		Warm	
	-31	B	-15	E	-5	F
Type of ventilation unit	Unidirectional					
Type of drive installed	Multi-speed					
Type of heat recovery system	None					
Maximum flow rate (m³/h)	128					
Electric power input (W)	16					
Reference flow rate (m³/s)	0.025					
Specific power input (SPI) (W/(m³/h))	0.08					
Control typology	Manual control					
Maximum external leakage rates (%)	2.7					
Declared typology	RVU UVU					
Sound power level (dB(A))	57					
The annual electricity consumption (AEC) (kWh/a)	Cold		Average		Warm	
	100		100		100	
The annual heating saved (AHS) (kWh/a)	Cold		Average		Warm	
	3400		1700		800	