100 MF One V L



Quiet axial extract fans suitable for use in Zone 1

- Sound pressure level LpA at 3 m: 27
- Impeller type: Mixed-flow
- Casing material: Plastic
- Backdraft protection: Backdraft damper
- Pull cord
- Ball bearing

	Unit of measurement	100 MF One V L
Connected air duct size	mm	100
Minimum supply voltage	V	220
Maximum supply voltage	V	240
Power supply frequency	Hz	50
Rated power	W	8
Unit current	A	0.05
Maximum airflow	m^3/h	95
Sound pressure level LpA at 3 m	dB(A)	27
Weight	kg	0.45
Ambient air temperature max	°C	40
Ambient air temperature min	°C	1
Ingress protection rating	-	IP44 Zone 1
Impeller material	-	Plastic

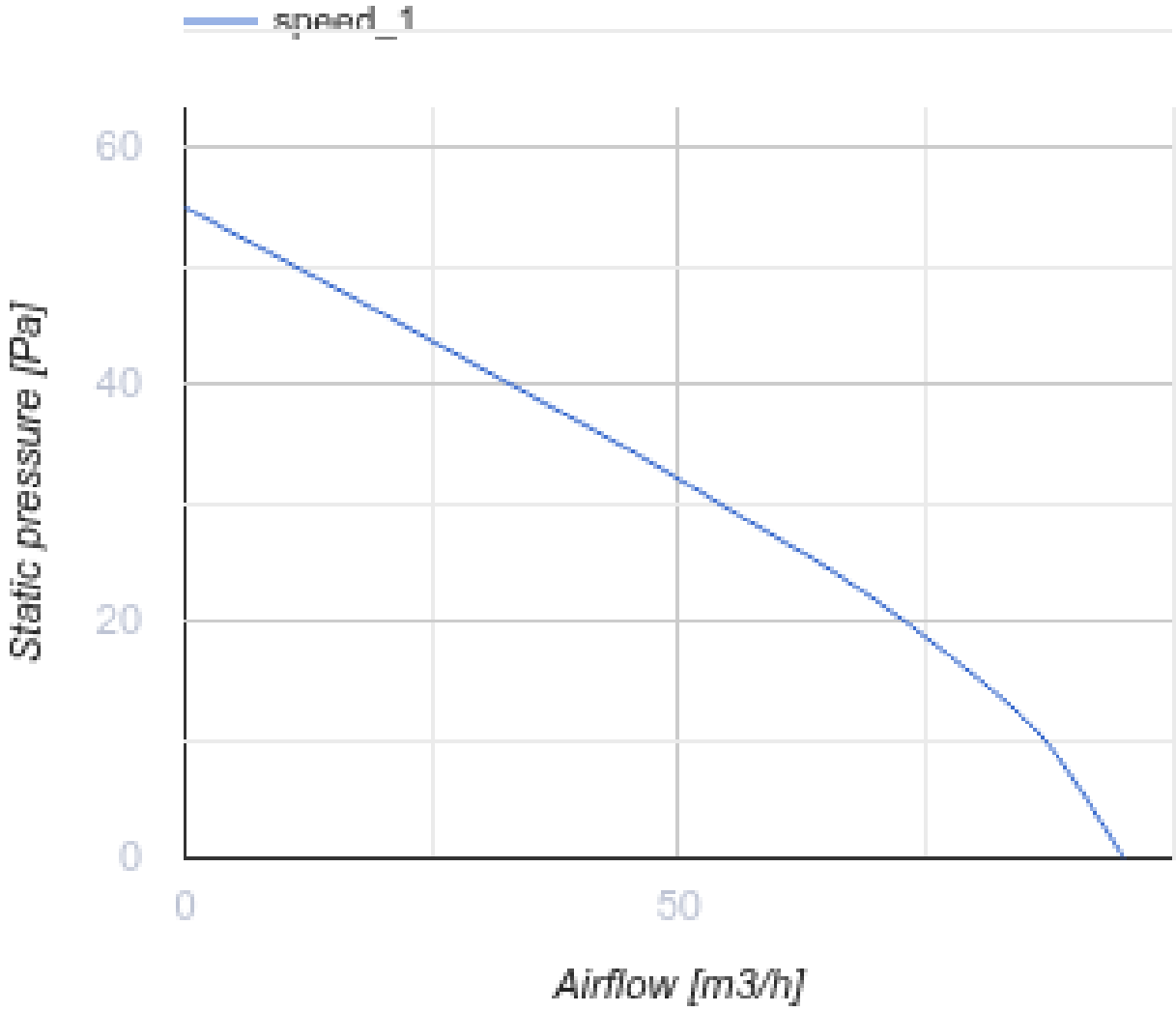

Dimensions

D	B	L	L1
99	150	79	19

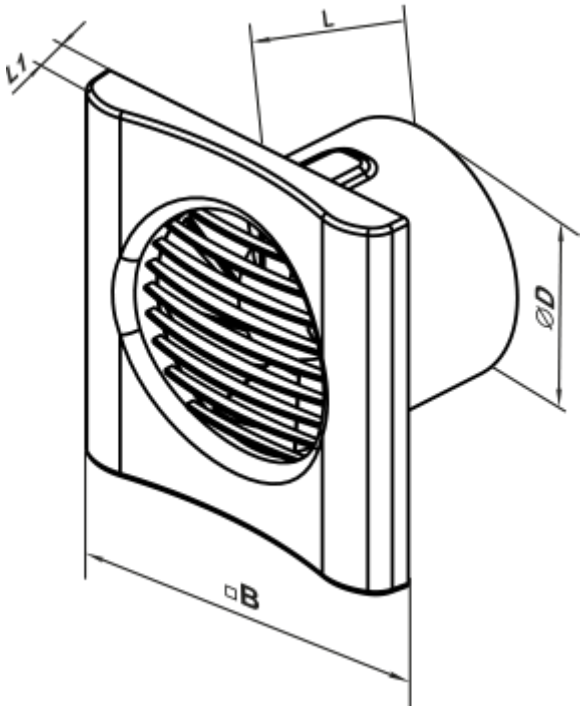

Accessories

Flanges

Name	Photo	Description
FO 100		The window flange