100 Silenta-MT



Quiet axial extract fans

- Sound pressure level LpA at 3 m: 26
- Impeller type: Axial
- Casing material: Plastic
- Timer: Turn off timer

	Unit of measurement	100 Silenta-MT
Connected air duct size	mm	100
Maximum supply voltage	V	240
Minimum supply voltage	V	220
Power supply frequency	Hz	50/60
Rated power	W	7
Unit current	A	0.035
Maximum airflow	m^3/h	78
Sound pressure level LpA at 3 m	dB(A)	26
Weight	kg	0.48
Ambient air temperature min	°C	1
Ambient air temperature max	°C	40
Ingress protection rating	-	IP34
Impeller material	-	Plastic

Dimensions

Ø D	B	H	L	L1
100	159	135	89	23

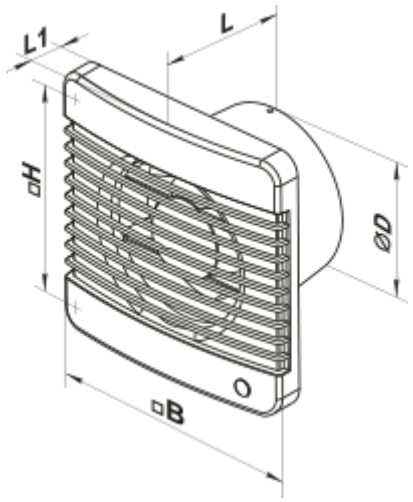

Accessories

Plastic

Name	Photo	Description
MV 100 V		Two-piece plastic grilles with angled louvers

Fittings

Name	Photo	Description
PVT 050/10		The adhesive PVC tape is an insulation tape made of plasticized PVC base covered with a glue layer
PVT 050/30		The adhesive PVC tape is an insulation tape made of plasticized PVC base covered with a glue layer
PVT 050/50		The adhesive PVC tape is an insulation tape made of plasticized PVC base covered with a glue layer
C 100		The clamps are designed for quick and reliable mounting and connection of various round ventilation system components. Clamps are made of stainless steel band

Round

Name	Photo	Description
1805		Wall mounting

Flexible ducts

Name	Photo	Description

Polyvent N		Flexible uninsulated air duct made of metallized film

Backdraft dampers

Name	Photo	Description
KO 100		Back valve is designed for domestic fan
KO1 100		Back valve is designed for domestic fan

Window vents

Name	Photo	Description
PO 400		Window ventilators for supply ventilation

Plastic

Name	Photo	Description
MV 102 VK		Supply and exhaust hoods

Metal

Name	Photo	Description
MVM 102 V N		Exhaust metal hoods

Ecodesign

Trademark	Vents					
Model	100 Silenta-MT					
Specific energy consumption (SEC) (kWh/(m²/a))	Cold		Average		Warm	
	-35	A	-17.1	E	-6.8	F
Type of ventilation unit	Unidirectional					
Type of drive installed	Multi-speed					
Type of heat recovery system	None					
Maximum flow rate (m³/h)	78					
Electric power input (W)	7					
Reference flow rate (m³/s)	0.015					
Specific power input (SPI) (W/(m³/h))	0.058					
Control typology	Clock control					
Maximum external leakage rates (%)	2.7					
Sound power level (dB(A))	46					
Declared typology	RVU UVU					
The annual electricity consumption (AEC) (kWh/a)	Cold		Average		Warm	
	67		67		67	
The annual heating saved (AHS) (kWh/a)	Cold		Average		Warm	
	3667		1874		848	