100 Simple T K L Q1



Axial extract fans with thin front panels

- Sound pressure level LpA at 3 m: 28
- Casing material: Plastic
- Timer: Turn off timer
- Ball bearing

	Unit of measurement	100 Simple T K L Q1
Connected air duct size	mm	100
Phases	-	1
Minimum supply voltage	V	220
Maximum supply voltage	V	240
Power supply frequency	Hz	50
Rated power	W	8
Unit current	A	0.05
Maximum airflow	m^3/h	85
Rotation speed at 50hz	-	2300
Sound pressure level LpA at 3 m	dB(A)	28
Weight	kg	0.58
Ambient air temperature min	°C	1
Ambient air temperature max	°C	40
Ingress protection rating	-	IP34
Impeller material	-	Plastic

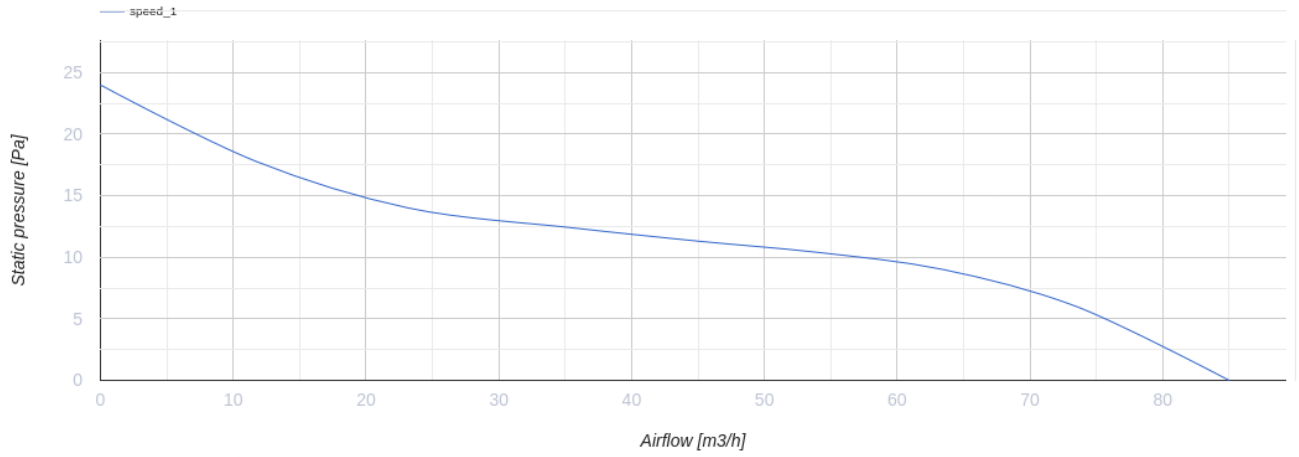

Dimensions

Ø D	B	L	L1
100	150	97	15

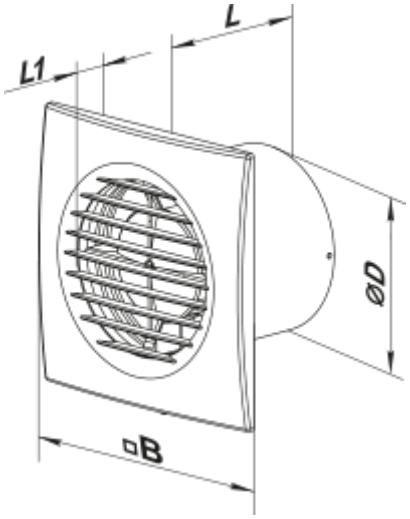

Accessories

Flanges

Name	Photo	Description
FO 100		The window flange