# 100 Simple TH K L Q1



Axial extract fans with thin front panels

- Sound pressure level LpA at 3 m: 28
- Casing material: Plastic
- Humidity sensor
- Timer: Turn off timer
- Ball bearing

| | Unit of measurement | 100 Simple TH K L Q1 |
|---|---|---|
| Connected air duct size | mm | 100 |
| Phases | - | 1 |
| Minimum supply voltage | V | 220 |
| Maximum supply voltage | V | 240 |
| Power supply frequency | Hz | 50 |
| Rated power | W | 8 |
| Unit current | A | 0.05 |
| Maximum airflow | $m^3/h$ | 85 |
| Rotation speed at 50hz | - | 2300 |
| Sound pressure level LpA at 3 m | dB(A) | 28 |
| Weight | kg | 0.58 |
| Ambient air temperature min | °C | 1 |
| Ambient air temperature max | °C | 40 |
| Ingress protection rating | - | IP34 |
| Impeller material | - | Plastic |

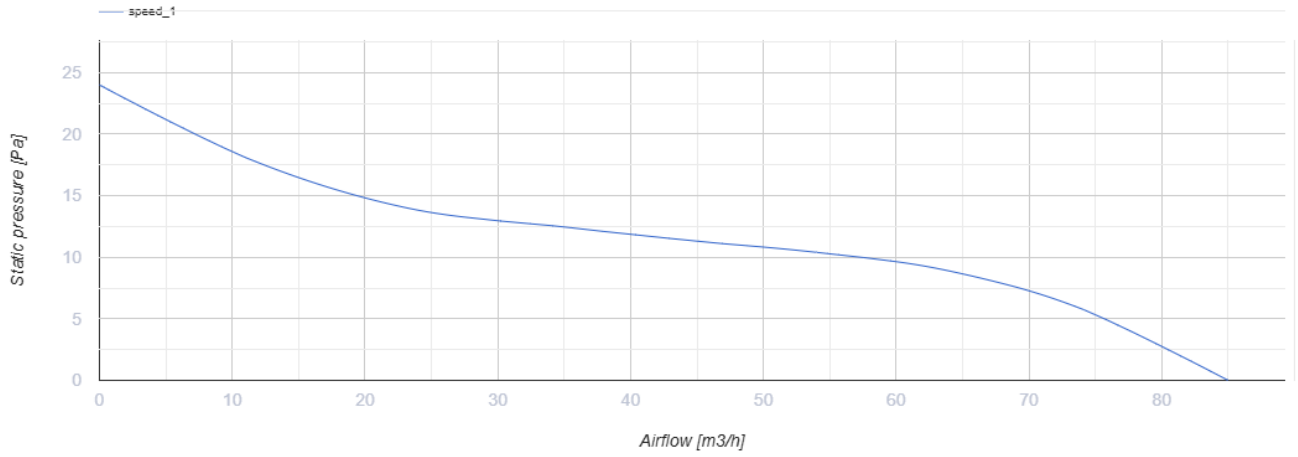


## Dimensions

| Ø D | B | L | L1 |
|---|---|---|---|
| 100 | 150 | 97 | 15 |

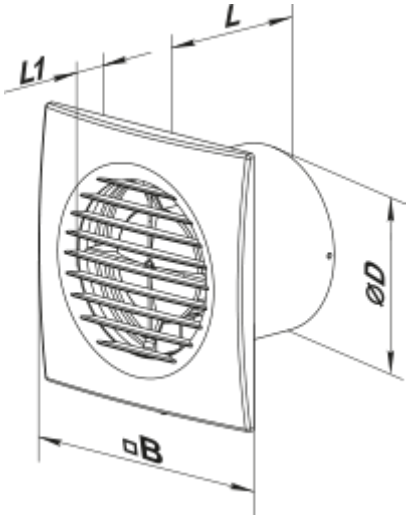


## Accessories

### Flanges

| Name | Photo | Description |
|---|---|---|
| FO 100 |  | The window flange |