100 Simple TH



Axial extract fans with thin front panels

- Sound pressure level LpA at 3 m: 34
- Casing material: Plastic
- Humidity sensor
- Timer: Turn off timer

	Unit of measurement	100 Simple TH
Connected air duct size	mm	100
Phases	-	1
Maximum supply voltage	V	240
Minimum supply voltage	V	220
Power supply frequency	Hz	50
Rated power	W	14
Unit current	A	0.09
Maximum airflow	m^3/h	95
Rotation speed at 50hz	-	2300
Sound pressure level LpA at 3 m	dB(A)	34
Weight	kg	0.58
Ambient air temperature max	°C	40
Ambient air temperature min	°C	1
Ingress protection rating	-	IP34
Impeller material	-	Plastic

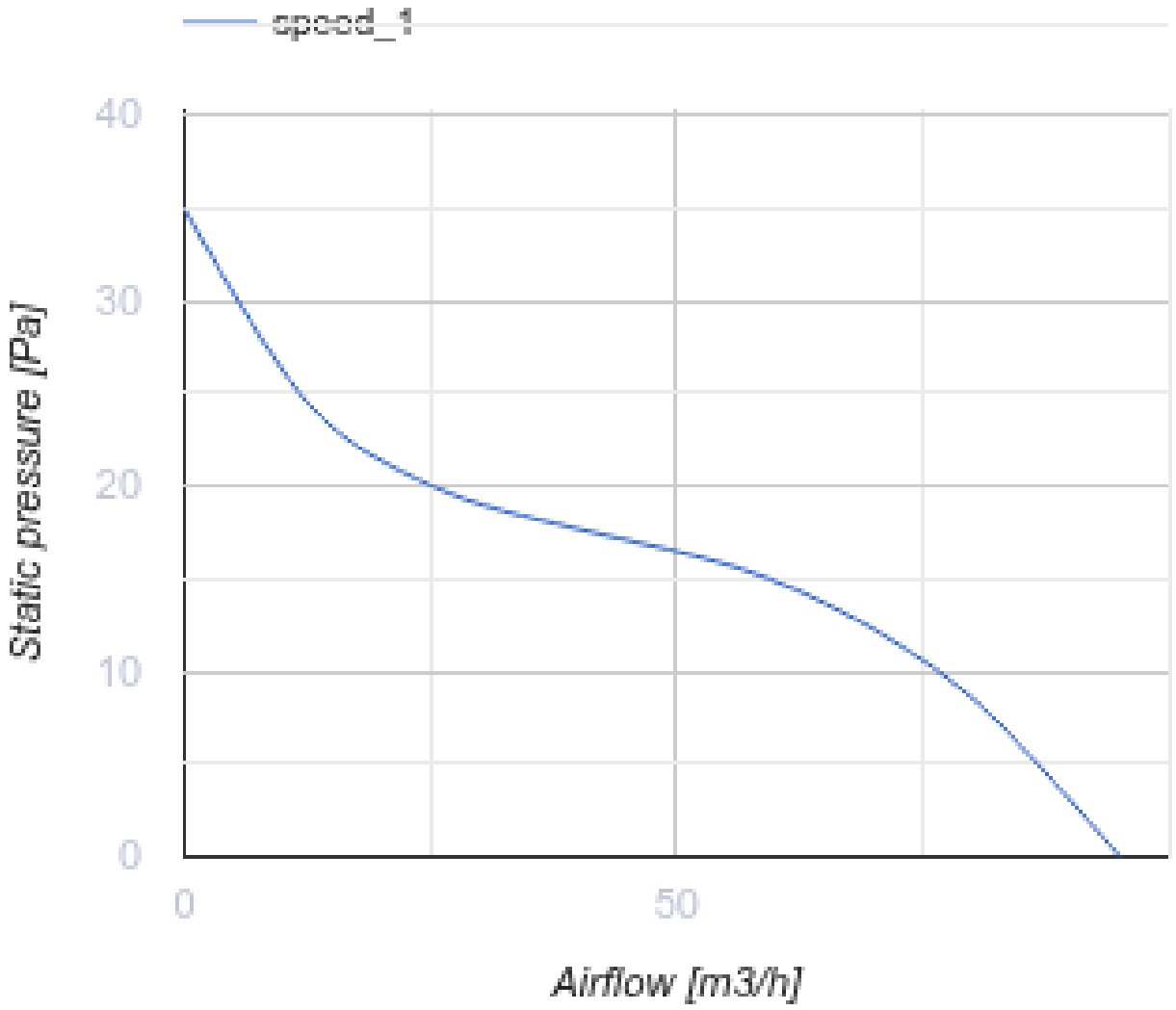

Dimensions

Ø D	B	L	L1
100	150	97	15

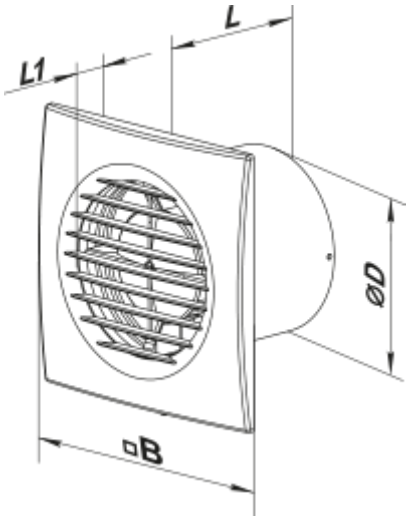

Accessories

Flanges

Name	Photo	Description
FO 100		The window flange

Ecodesign

Trademark	Vents					
Model	100 Simple TH					
Specific energy consumption (SEC) (kWh/(m²/a))	Cold		Average		Warm	
	-28.9	B	-12.5	E	-3.1	F
Type of ventilation unit	Unidirectional					
Type of drive installed	Single speed					
Type of heat recovery system	None					
Maximum flow rate (m³/h)	95					
Electric power input (W)	14					
Reference flow rate (m³/s)	0.018					
Specific power input (SPI) (W/(m³/h))	0.147					
Control typology	Manual control					
Maximum external leakage rates (%)	2.7					
Sound power level (dB(A))	54					
Declared typology	RVU UVU					
The annual electricity consumption (AEC) (kWh/a)	Cold		Average		Warm	
	185		185		185	
The annual heating saved (AHS) (kWh/a)	Cold		Average		Warm	
	3355		1715		776	