100 VKOk

Axial high-performance inline fans for extract or supply ventilation

- Sound pressure level LpA at 3 m: 37
- Casing material: Plastic



	Unit of measurement	100 VKOk
Connected air duct size	mm	100
Phases	-	1
Minimum supply voltage	V	220
Maximum supply voltage	V	240
Power supply frequency	Hz	50/60
Rated power	W	14
Unit current	A	0.085
Maximum airflow	m^3/h	105
Rotation speed at 50hz	-	2300
Sound pressure level LpA at 3 m	dB(A)	37
Weight	kg	0.41
Ambient air temperature min	°C	1
Ambient air temperature max	°C	40
Ingress protection rating	-	IPX4
Impeller material	-	Plastic

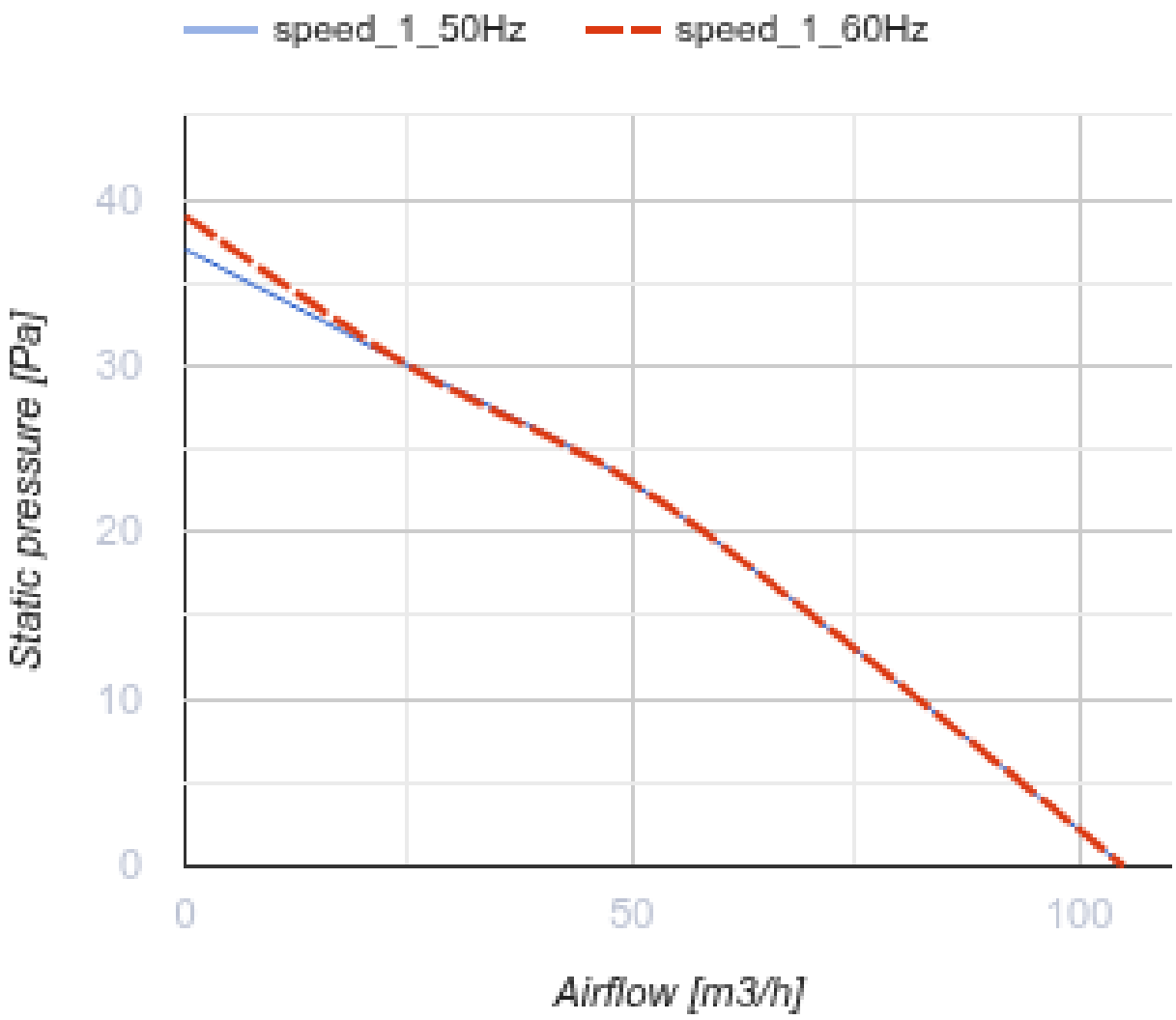

Dimensions

ØD	ØD1	B	B1	H	L	L1	L2	L3
100	104	160	144	114	91	31	45	29

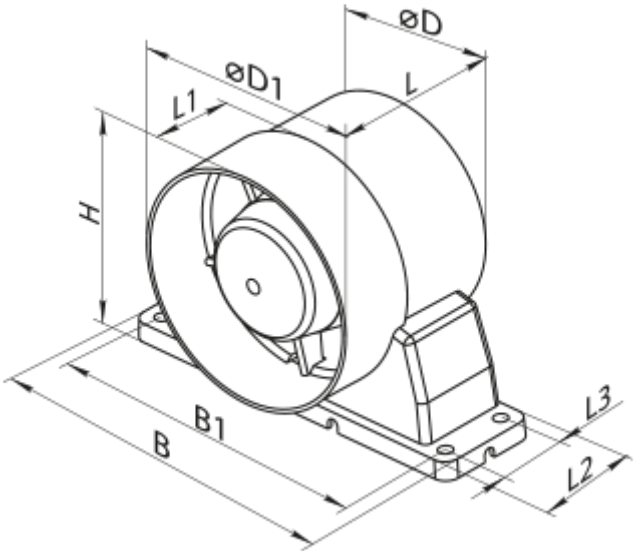

Accessories

Plastic

Name	Photo	Description
MV 100 VR		Two-piece plastic grilles with angled louvers
MV 100 V		Two-piece plastic grilles with angled louvers

Fittings

Name	Photo	Description
PVT 050/10		The adhesive PVC tape is an insulation tape made of plasticized PVC base covered with a glue layer
PVT 050/30		The adhesive PVC tape is an insulation tape made of plasticized PVC base covered with a glue layer
PVT 050/50		The adhesive PVC tape is an insulation tape made of plasticized PVC base covered with a glue layer
C 100		The clamps are designed for quick and reliable mounting and connection of various round ventilation system components. Clamps are made of stainless steel band

Round

Name	Photo	Description

1805		Wall mounting

Flexible ducts

Name	Photo	Description
Polyvent N		Flexible uninsulated air duct made of metallized film

Window vents

Name	Photo	Description
PO 400		Window ventilators for supply ventilation

Plastic

Name	Photo	Description
MV 102 VK		Supply and exhaust hoods

Metal

Name	Photo	Description
MVM 102 V N		Exhaust metal hoods