100 Wave One T L (220 V/60 Hz)



Axial decorative fans for extract ventilation suitable for use in Zone 1

- Impeller type: Mixed-flow
- Casing material: Plastic
- Backdraft protection: Backdraft damper
- Timer: Turn off timer
- Ball bearing

	Unit of measurement	100 Wave One T L (220 V/60 Hz)
Connected air duct size	mm	100
Minimum supply voltage	V	220
Maximum supply voltage	V	220
Weight	kg	0.51
Ambient air temperature min	°C	1
Ambient air temperature max	°C	45
Ingress protection rating	-	IP44 Zone 1
Impeller material	-	Plastic

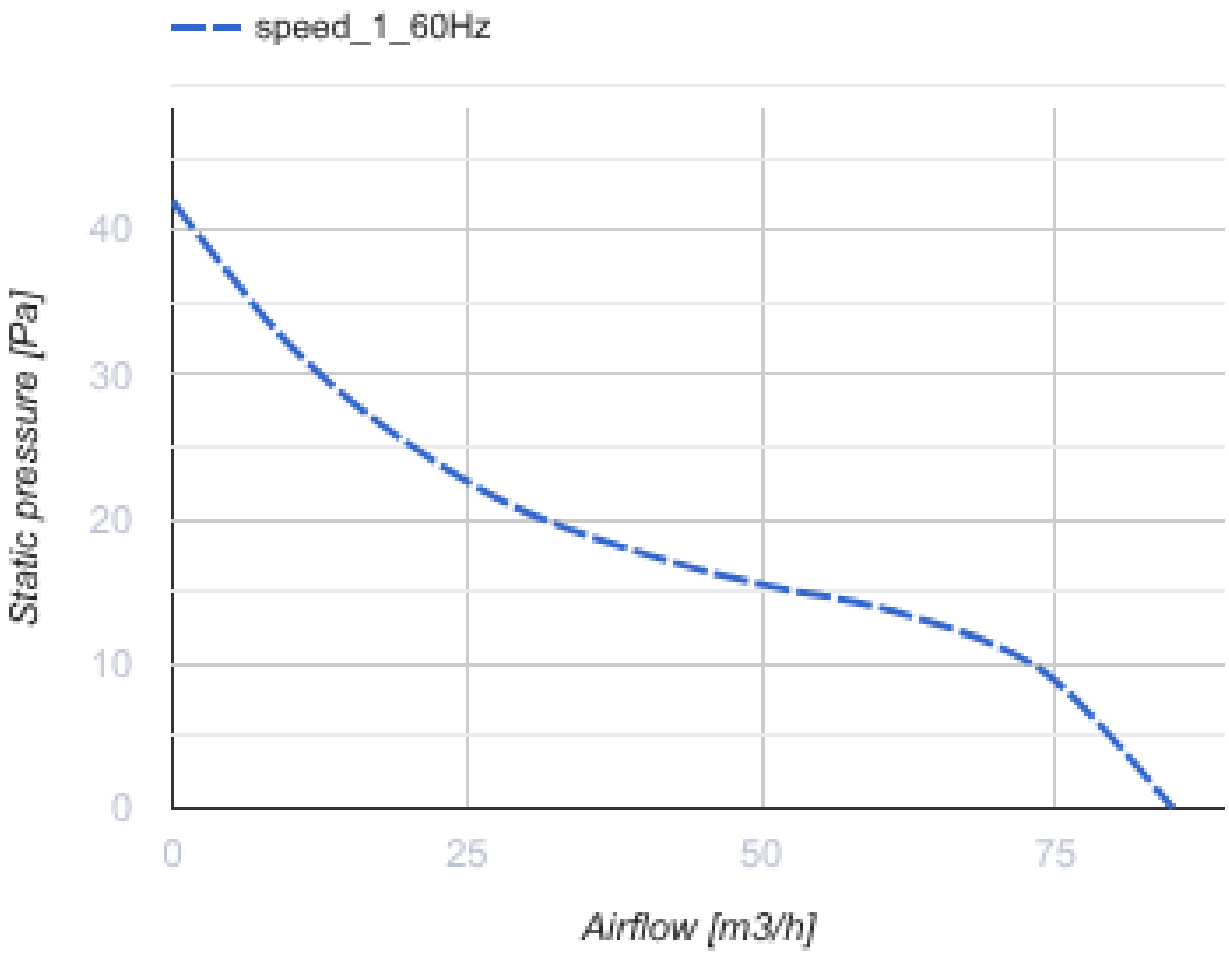

Dimensions

D	B	L	L1
99	160	79	38

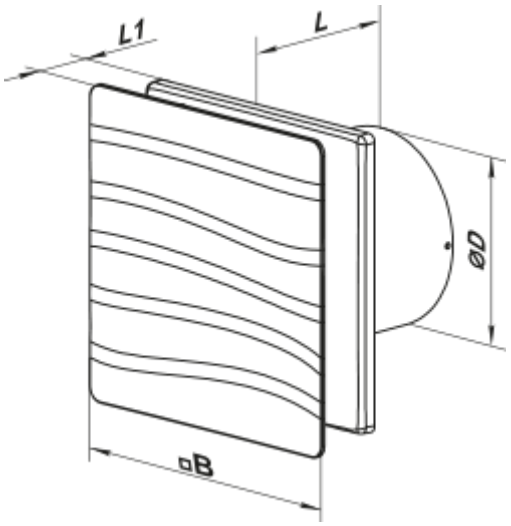

Accessories

Flanges

Name	Photo	Description
FO 100		The window flange