100 Wave One T1 L



Axial decorative fans for extract ventilation suitable for use in Zone 1

- Sound pressure level LpA at 3 m: 26
- Impeller type: Mixed-flow
- Casing material: Plastic
- Backdraft protection: Backdraft damper
- Timer: Turn on timer, Turn off timer
- Ball bearing

	Unit of measurement	100 Wave One T1 L
Connected air duct size	mm	100
Minimum supply voltage	V	220
Maximum supply voltage	V	240
Power supply frequency	Hz	50
Rated power	W	8
Unit current	A	0.5
Maximum airflow	m³/h	85
Sound pressure level LpA at 3 m	dB(A)	26
Weight	kg	0.51
Ambient air temperature max	°C	45
Ambient air temperature min	°C	1
Ingress protection rating	-	IP44 Zone 1
Impeller material	-	Plastic

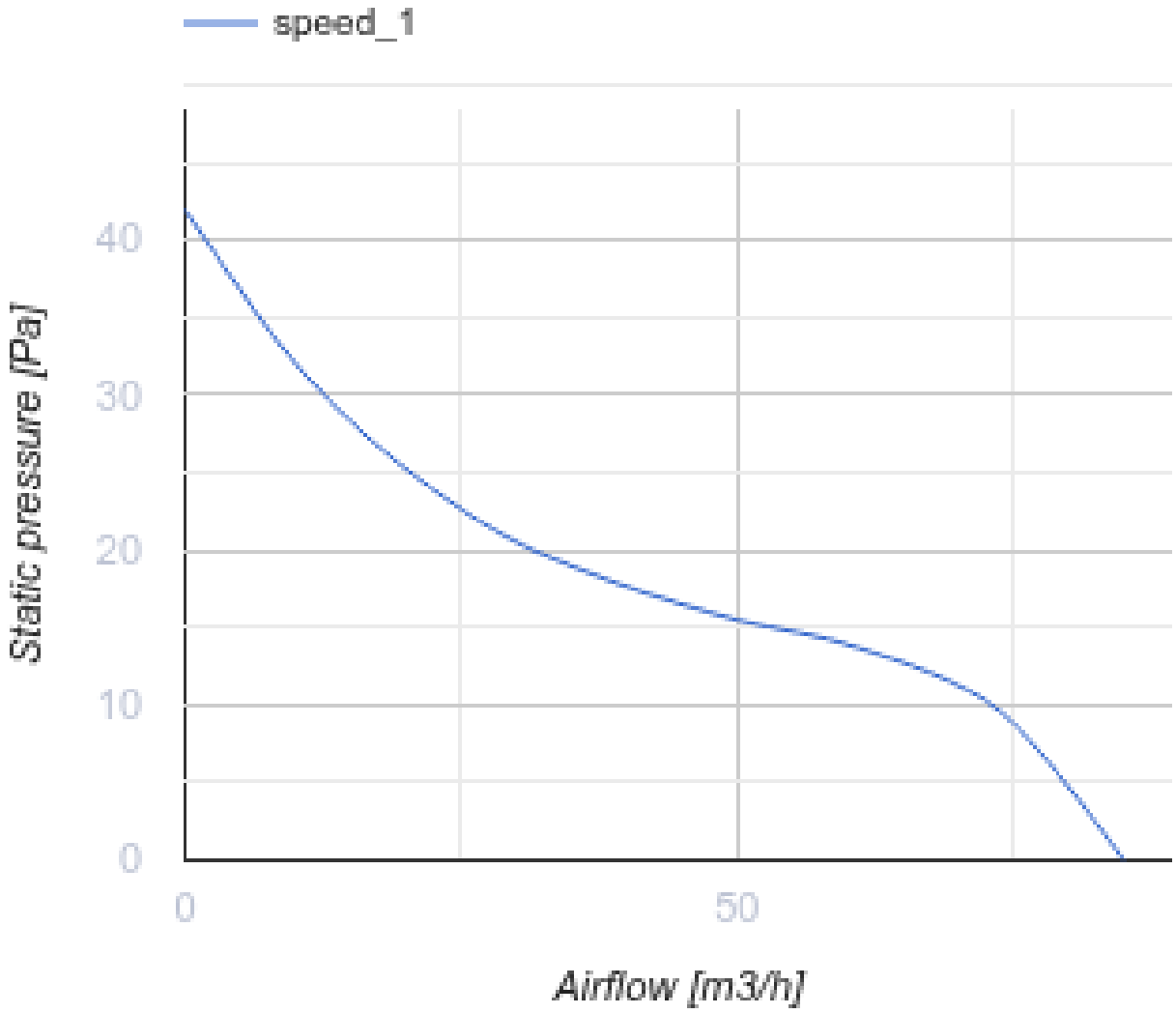

Dimensions

D	B	L	L1
99	160	79	38

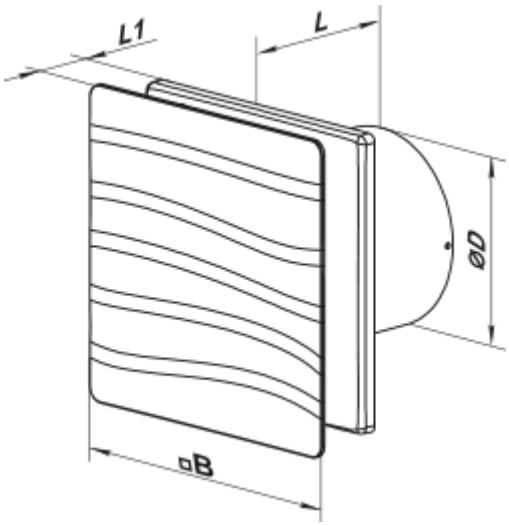

Accessories

Flanges

Name	Photo	Description
FO 100		The window flange