120 Simple K L Q1



Axial extract fans with thin front panels

- Sound pressure level LpA at 3 m: 32
- Casing material: Plastic
- Backdraft protection: Backdraft damper
- Ball bearing

	Unit of measurement	120 Simple K L Q1
Connected air duct size	mm	120
Phases	-	1
Minimum supply voltage	V	220
Maximum supply voltage	V	240
Power supply frequency	Hz	50
Rated power	W	10
Unit current	A	0.05
Maximum airflow	m^3/h	162
Sound pressure level LpA at 3 m	dB(A)	32
Weight	kg	0.74
Ambient air temperature min	°C	1
Ambient air temperature max	°C	40
Ingress protection rating	-	IP34
Impeller material	-	Plastic

Dimensions

Ø D	B	L	L1
120	175	94	15

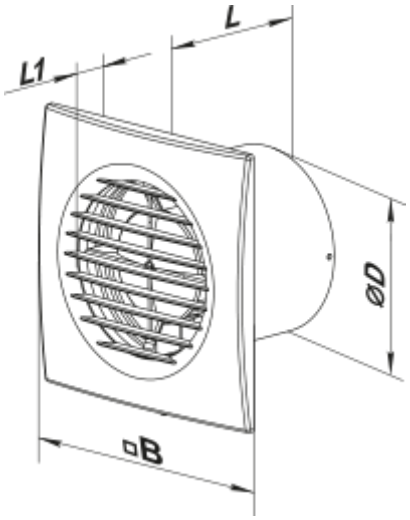
L
L1
ØD
B