120 Simple turbo



Axial extract fans with thin front panels

- Sound pressure level LpA at 3 m: 37
- Casing material: Plastic

	Unit of measurement	120 Simple turbo
Connected air duct size	mm	120
Phases	-	1
Minimum supply voltage	V	220
Maximum supply voltage	V	240
Power supply frequency	Hz	50
Rated power	W	24
Unit current	A	0.1
Maximum airflow	m^3/h	219
Sound pressure level LpA at 3 m	dB(A)	37
Weight	kg	0.81
Ambient air temperature min	°C	1
Ambient air temperature max	°C	40
Ingress protection rating	-	IP34
Impeller material	-	Plastic

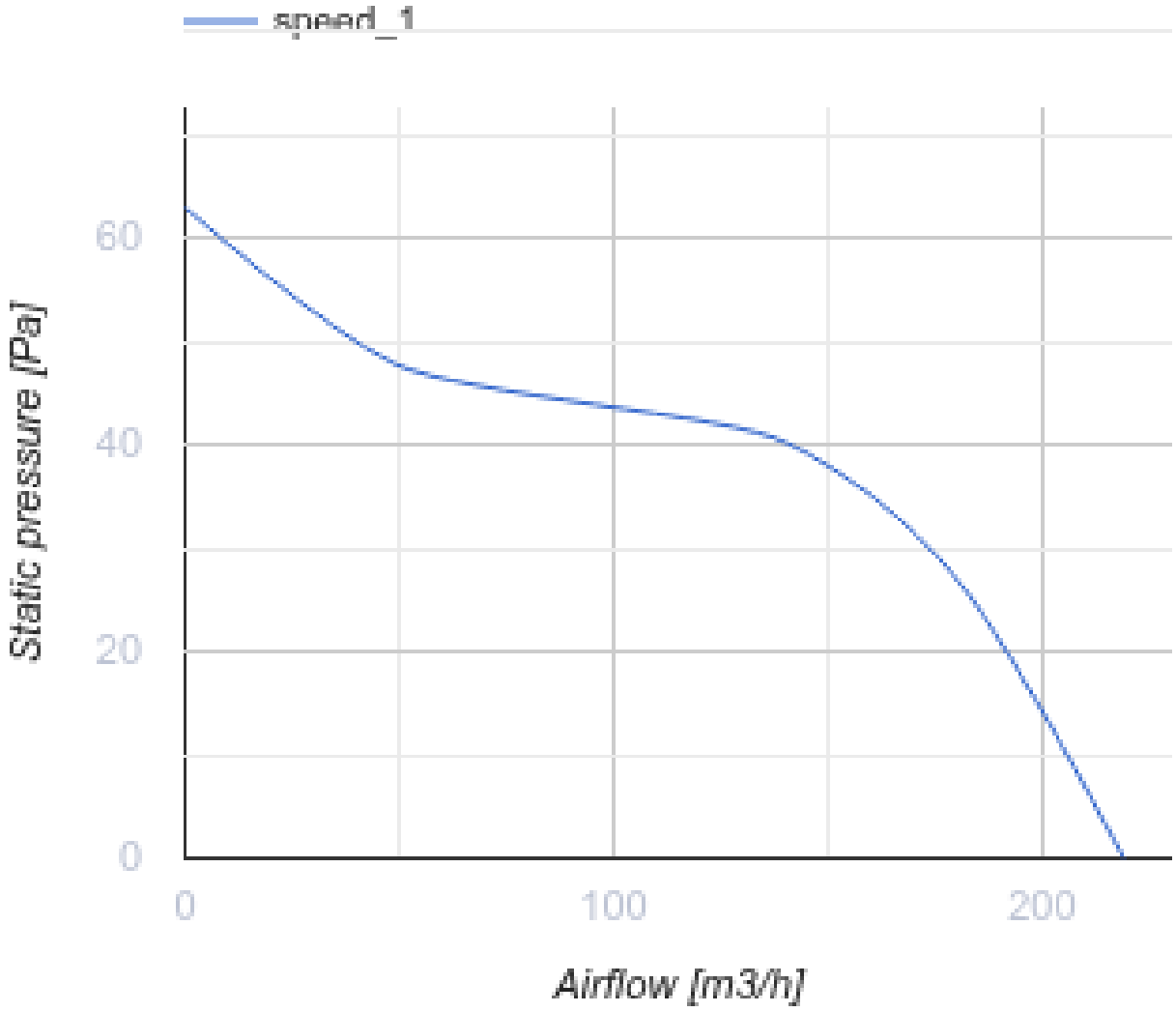

Dimensions

Ø D	B	L	L1
120	175	94	15

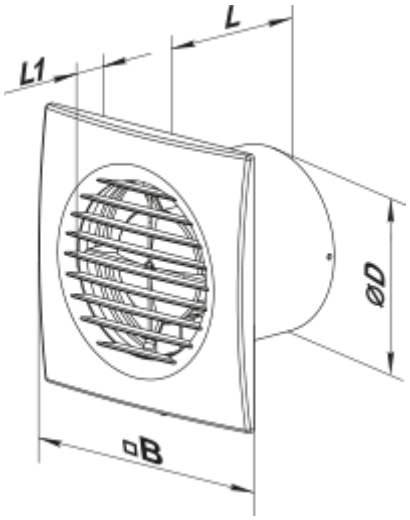
L
L1
ØD
B

Ecodesign

Trademark	Vents					
Model	120 Simple turbo					
Specific energy consumption (SEC) (kWh/(m²/a))	Cold		Average		Warm	
	-30.1	B	-13.7	E	-4.3	F
Type of ventilation unit	Unidirectional					
Type of drive installed	Single speed					
Type of heat recovery system	None					
Maximum flow rate (m³/h)	219					
Electric power input (W)	24					
Reference flow rate (m³/s)	0.043					
Specific power input (SPI) (W/(m³/h))	0.11					
Control typology	Manual control					
Maximum external leakage rates (%)	2.7					
Sound power level (dB(A))	57					
Declared typology	RVU UVU					
The annual electricity consumption (AEC) (kWh/a)	Cold		Average		Warm	
	137		137		137	
The annual heating saved (AHS) (kWh/a)	Cold		Average		Warm	
	3355		1715		776	