120 Simple



Axial extract fans with thin front panels

- Sound pressure level LpA at 3 m: 35
- Casing material: Plastic

	Unit of measurement	120 Simple
Connected air duct size	mm	120
Phases	-	1
Minimum supply voltage	V	220
Maximum supply voltage	V	240
Power supply frequency	Hz	50
Rated power	W	16
Unit current	A	0.09
Maximum airflow	m³/h	174
Sound pressure level LpA at 3 m	dB(A)	35
Weight	kg	0.74
Ambient air temperature min	°C	1
Ambient air temperature max	°C	40
Ingress protection rating	-	IP34
Impeller material	-	Plastic

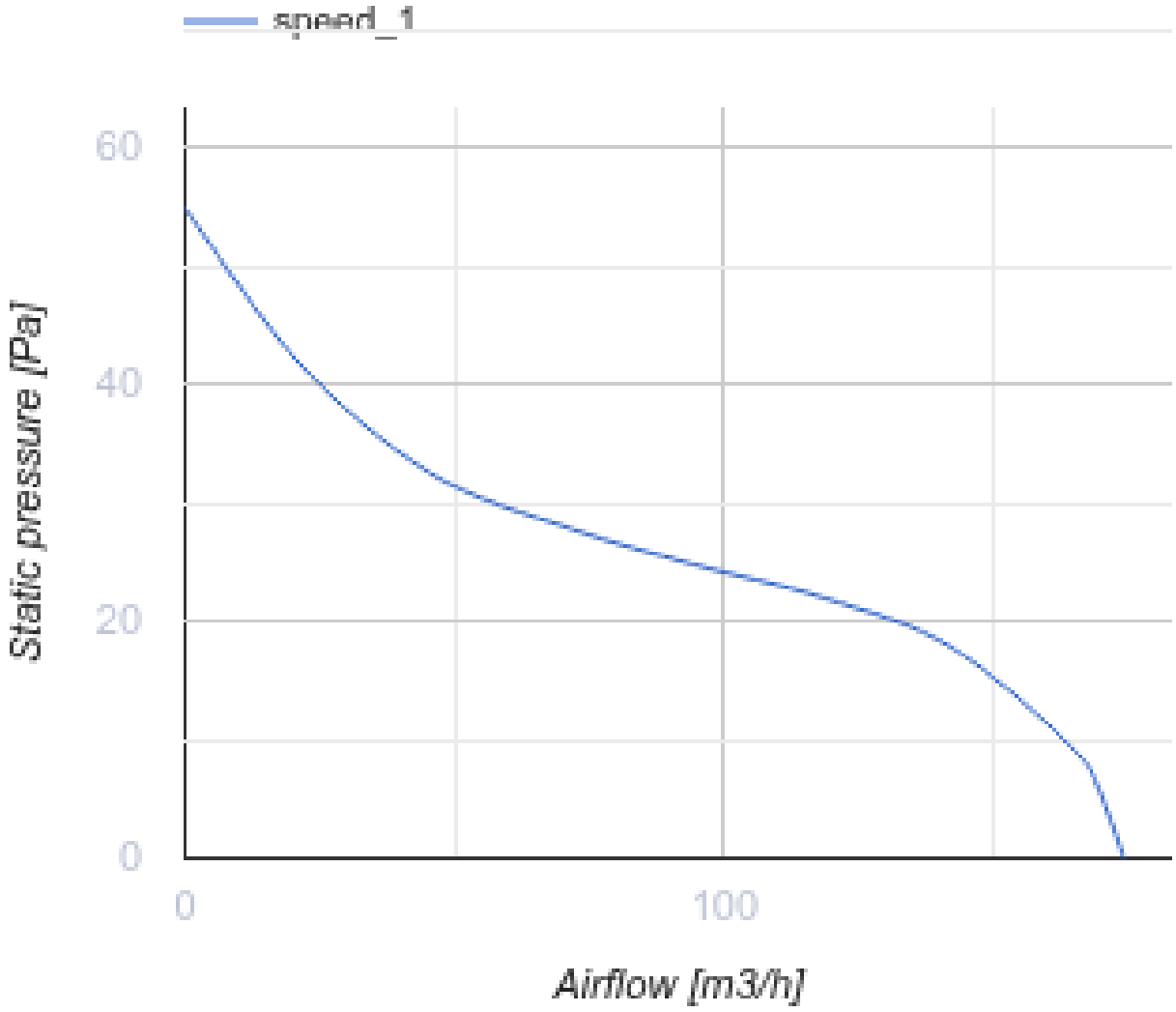

Dimensions

Ø D	B	L	L1
120	175	94	15

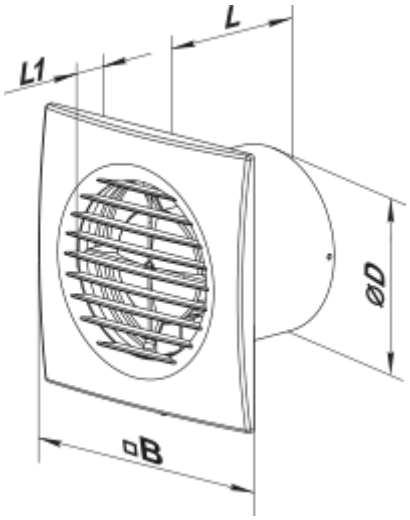
L
L1
ØD
B

Ecodesign

Trademark	Vents					
Model	120 Simple					
Specific energy consumption (SEC) (kWh/(m²/a))	Cold		Average		Warm	
	-30.7	B	-14.3	E	-4.9	F
Type of ventilation unit	Unidirectional					
Type of drive installed	Single speed					
Type of heat recovery system	None					
Maximum flow rate (m³/h)	174					
Electric power input (W)	16					
Reference flow rate (m³/s)	0.034					
Specific power input (SPI) (W/(m³/h))	0.092					
Control typology	Manual control					
Maximum external leakage rates (%)	2.7					
Sound power level (dB(A))	55					
Declared typology	RVU UVU					
The annual electricity consumption (AEC) (kWh/a)	Cold		Average		Warm	
	115		115		115	
The annual heating saved (AHS) (kWh/a)	Cold		Average		Warm	
	3355		1715		776	