# 125 Ace

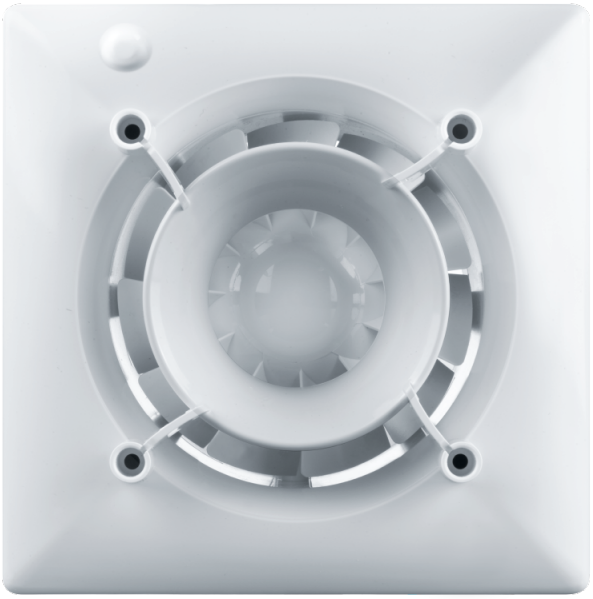

Quiet axial extract fans compatible with the Design decorative panels

- Sound pressure level LpA at 3 m: 32
- Impeller type: Mixed-flow
- Casing material: Plastic
- Ball bearing

| | Unit of measurement | 125 Ace |
|---|---|---|
| Connected air duct size | mm | 125 |
| Phases | - | 1 |
| Minimum supply voltage | V | 220 |
| Maximum supply voltage | V | 240 |
| Power supply frequency | Hz | 50 |
| Rated power | W | 17 |
| Unit current | A | 0.11 |
| Maximum airflow | m³/h | 160 |
| Rotation speed at 50hz | - | 2200 |
| Sound pressure level LpA at 3 m | dB(A) | 32 |
| Ambient air temperature min | °C | 1 |
| Ambient air temperature max | °C | 40 |
| Ingress protection rating | - | IP44 |
| Impeller material | - | Plastic |

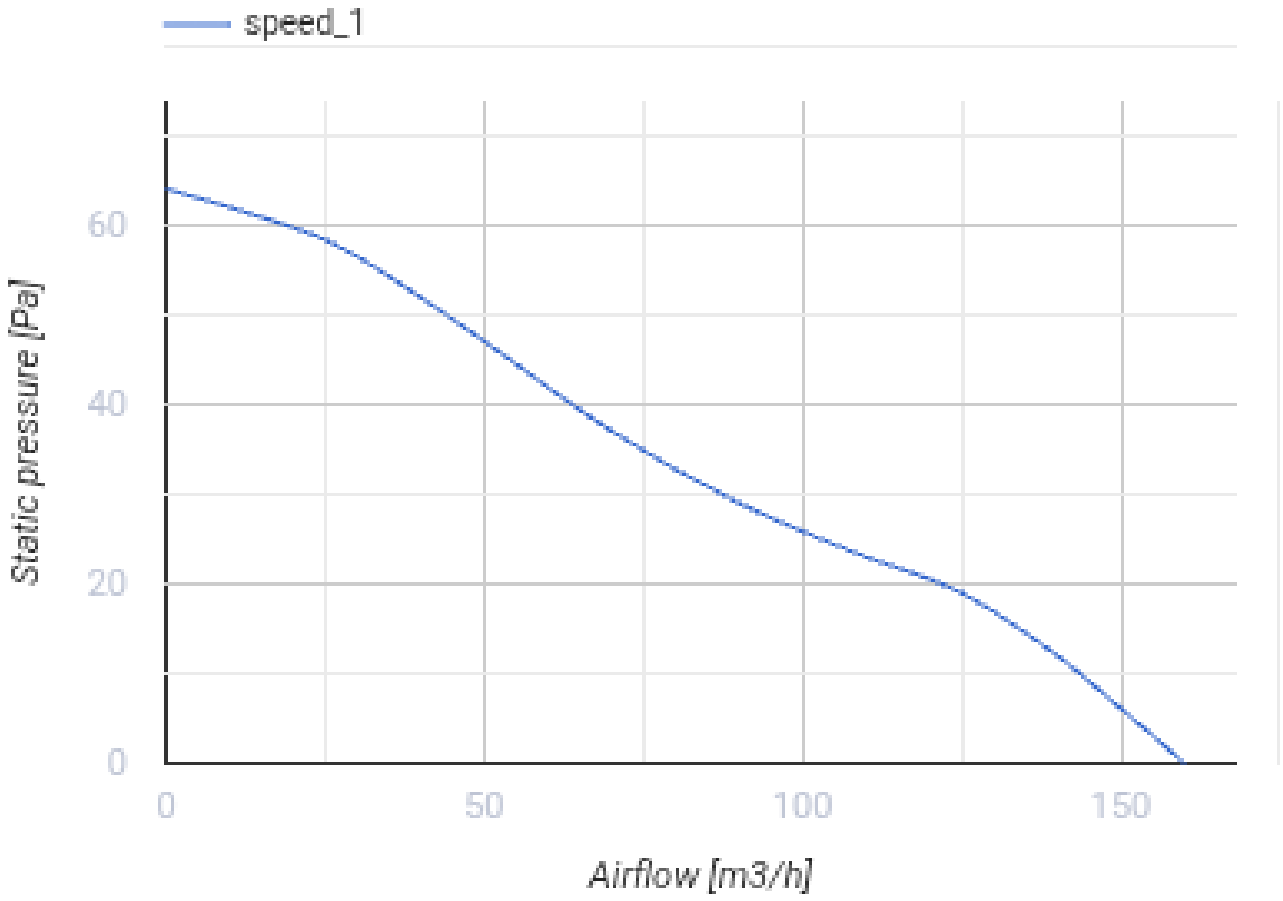


## Dimensions

| ØD | B | L | L1 |
|---|---|---|---|
| 124 | 180 | 85 | 37 |

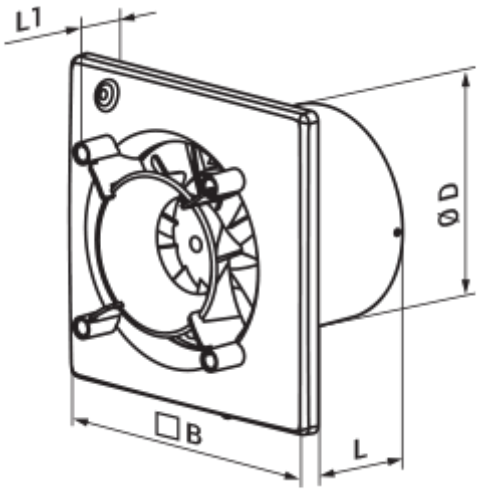

# Accessories

## Plastic

| Name | Photo | Description |
|---|---|---|
| MV 120 V |  | Two-piece plastic grilles with angled louvers |

## Fittings

| Name | Photo | Description |
|---|---|---|
| PVT 050/10 |  | The adhesive PVC tape is an insulation tape made of plasticized PVC base covered with a glue layer |
| PVT 050/30 |  | The adhesive PVC tape is an insulation tape made of plasticized PVC base covered with a glue layer |
| PVT 050/50 |  | The adhesive PVC tape is an insulation tape made of plasticized PVC base covered with a glue layer |
| C 125 |  | The clamps are designed for quick and reliable mounting and connection of various round ventilation system components. Clamps are made of stainless steel band |

## Round

| Name | Photo | Description |
|---|---|---|
| 2805 |  | Wall mounting |

## Flexible ducts

| Name | Photo | Description |
|---|---|---|
| Polyvent N |  | Flexible uninsulated air duct made of metallized film |

## Decorative panels

| Name | Photo | Description |
|---|---|---|
| FP 180 Plain |  | Removable decorative front panels are a universal solution allowing to choose the design of a fan or ventilation grille for any interior of a bathroom or kitchen. |
| FP 180 Plain red |  | Removable decorative front panels are a universal solution allowing to choose the design of a fan or ventilation grille for any interior of a bathroom or kitchen. |

| | | |
|---|---|---|
| FP 180 Plain black sapphire |  | Removable decorative front panels are a universal solution allowing to choose the design of a fan or ventilation grille for any interior of a bathroom or kitchen. |
| FP 180 Plain metallic |  | Removable decorative front panels are a universal solution allowing to choose the design of a fan or ventilation grille for any interior of a bathroom or kitchen. |
| FP 180 Plain wing |  | Removable decorative front panels are a universal solution allowing to choose the design of a fan or ventilation grille for any interior of a bathroom or kitchen. |
| FP 180 Aqua |  | Removable decorative front panels are a universal solution allowing to choose the design of a fan or ventilation grille for any interior of a bathroom or kitchen. |
| FP 180 Mars |  | Removable decorative front panels are a universal solution allowing to choose the design of a fan or ventilation grille for any interior of a bathroom or kitchen. |
| FP 180 Mystery |  | Removable decorative front panels are a universal solution allowing to choose the design of a fan or ventilation grille for any interior of a bathroom or kitchen. |
| FP 180 Plain chrome |  | Removable decorative front panels are a universal solution allowing to choose the design of a fan or ventilation grille for any interior of a bathroom or kitchen. |
| FP 180 Plain alumat |  | Removable decorative front panels are a universal solution allowing to choose the design of a fan or ventilation grille for any interior of a bathroom or kitchen. |
| FPA 180/125 Glass-1 |  | Removable decorative front panels are a universal solution allowing to choose the design of a fan or ventilation grille for any interior of a bathroom or kitchen. |
| FPA 180/125 Glass-1 red |  | Removable decorative front panels are a universal solution allowing to choose the design of a fan or ventilation grille for any interior of a bathroom or kitchen. |
| FPA 180/125 Glass-1 black |  | Removable decorative front panels are a universal solution allowing to choose the design of a fan or ventilation grille for any interior of a bathroom or kitchen. |
| FP 180 Plain gold |  | Removable decorative front panels are a universal solution allowing to choose the design of a fan or ventilation grille for any interior of a bathroom or kitchen. |
| FP 180 Plain dim |  | Removable decorative front panels are a universal solution allowing to choose the design of a fan or ventilation grille for any interior of a bathroom or kitchen. |

### Backdraft dampers

| Name | Photo | Description |
|---|---|---|
| KO 125 |  | Back valve is designed for domestic fan |

**Window vents**

| Name | Photo | Description |
|---|---|---|
| PO 400 |  | Window ventilators for supply ventilation |

### Plastic

| Name | Photo | Description |
|---|---|---|
| MV 122 VK |  | Supply and exhaust hoods |

### Metal

| Name | Photo | Description |
|---|---|---|
| MVM 122 V N |  | Exhaust metal hoods |

## Ecodesign

| Trademark | Vents | | | | | |
|---|---|---|---|---|---|---|
| Model | 125 Ace | | | | | |
| Specific energy consumption (SEC) (kWh/(m²/a)) | Cold | | Average | | Warm | |
| | -30.2 | B | -13.8 | E | -4.4 | F |
| Type of ventilation unit | Unidirectional | | | | | |
| Type of drive installed | Single speed | | | | | |
| Type of heat recovery system | None | | | | | |
| Maximum flow rate (m³/h) | 160 | | | | | |
| Electric power input (W) | 17 | | | | | |
| Reference flow rate (m³/s) | 0.031 | | | | | |
| Specific power input (SPI) (W/(m³/h)) | 0.106 | | | | | |
| Control typology | Manual control | | | | | |
| Maximum external leakage rates (%) | 2.7 | | | | | |
| Declared typology | RVU UVU | | | | | |
| Sound power level (dB(A)) | 52 | | | | | |
| The annual electricity consumption (AEC) (kWh/a) | Cold | | Average | | Warm | |
| | 133 | | 133 | | 133 | |
| The annual heating saved (AHS) (kWh/a) | Cold | | Average | | Warm | |
| | 3355 | | 1715 | | 776 | |