# 125 Base TH L Q



Axial extract high-performance fans, compatible with the Design decorative panels

- Sound pressure level LpA at 3 m: 29
- Impeller type: Axial
- Casing material: Plastic
- Humidity sensor
- Timer: Turn off timer
- Ball bearing

| | Unit of measurement | 125 Base TH L Q |
|---|---|---|
| Connected air duct size | mm | 125 |
| Phases | - | 1 |
| Maximum supply voltage | V | 240 |
| Minimum supply voltage | V | 220 |
| Power supply frequency | Hz | 50/60 |
| Rated power | W | 8 |
| Unit current | A | 0.053 |
| Maximum airflow | m³/h | 147 |
| Rotation speed at 50hz | - | 1600 |
| Sound pressure level LpA at 3 m | dB(A) | 29 |
| Ambient air temperature min | °C | 1 |
| Ambient air temperature max | °C | 40 |
| Ingress protection rating | - | IP24 |
| Impeller material | - | Plastic |

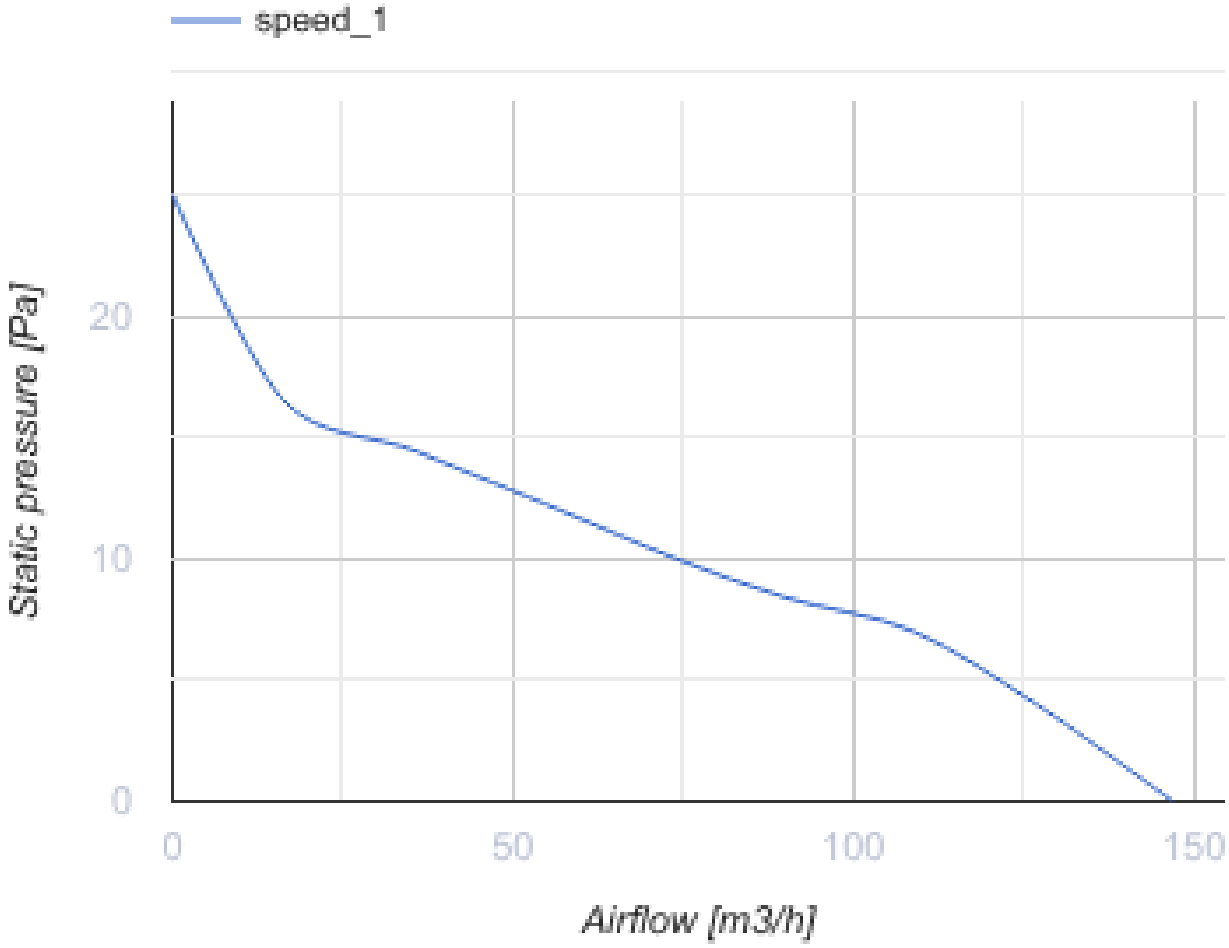


## Dimensions

| ØD | B | L | L1 |
|---|---|---|---|
| 124 | 165 | 88 | 16 |

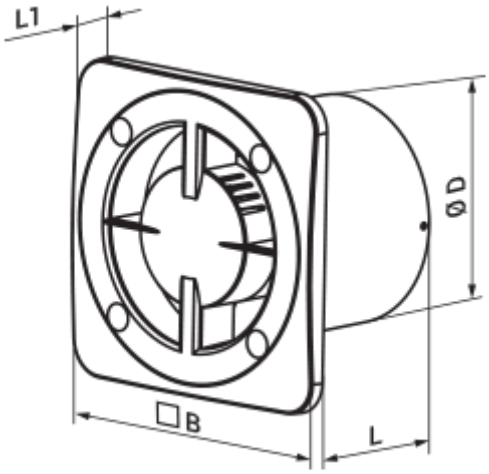

# Accessories

## Plastic

| Name | Photo | Description |
|---|---|---|
| MV 120 V |  | Two-piece plastic grilles with angled louvers |

## Fittings

| Name | Photo | Description |
|---|---|---|
| PVT 050/10 |  | The adhesive PVC tape is an insulation tape made of plasticized PVC base covered with a glue layer |
| PVT 050/30 |  | The adhesive PVC tape is an insulation tape made of plasticized PVC base covered with a glue layer |
| PVT 050/50 |  | The adhesive PVC tape is an insulation tape made of plasticized PVC base covered with a glue layer |
| C 125 |  | The clamps are designed for quick and reliable mounting and connection of various round ventilation system components. Clamps are made of stainless steel band |

## Round

| Name | Photo | Description |
|---|---|---|
| 2805 |  | Wall mounting |

## Flexible ducts

| Name | Photo | Description |
|---|---|---|
| Polyvent N |  | Flexible uninsulated air duct made of metallized film |

## Decorative panels

| Name | Photo | Description |
|---|---|---|
| FP 180 Plain |  | Removable decorative front panels are a universal solution allowing to choose the design of a fan or ventilation grille for any interior of a bathroom or kitchen. |
| FP 180 Plain red |  | Removable decorative front panels are a universal solution allowing to choose the design of a fan or ventilation grille for any interior of a bathroom or kitchen. |

| | | |
|---|---|---|
| FP 180 Plain black sapphire |  | Removable decorative front panels are a universal solution allowing to choose the design of a fan or ventilation grille for any interior of a bathroom or kitchen. |
| FP 180 Plain metallic |  | Removable decorative front panels are a universal solution allowing to choose the design of a fan or ventilation grille for any interior of a bathroom or kitchen. |
| FP 180 Plain wing |  | Removable decorative front panels are a universal solution allowing to choose the design of a fan or ventilation grille for any interior of a bathroom or kitchen. |
| FPB 180/125 Disc |  | Removable decorative front panels are a universal solution allowing to choose the design of a fan or ventilation grille for any interior of a bathroom or kitchen. |
| FP 180 Aqua |  | Removable decorative front panels are a universal solution allowing to choose the design of a fan or ventilation grille for any interior of a bathroom or kitchen. |
| FP 180 Mars |  | Removable decorative front panels are a universal solution allowing to choose the design of a fan or ventilation grille for any interior of a bathroom or kitchen. |
| FP 180 Mystery |  | Removable decorative front panels are a universal solution allowing to choose the design of a fan or ventilation grille for any interior of a bathroom or kitchen. |
| FP 180 Plain chrome |  | Removable decorative front panels are a universal solution allowing to choose the design of a fan or ventilation grille for any interior of a bathroom or kitchen. |
| FP 180 Plain alumat |  | Removable decorative front panels are a universal solution allowing to choose the design of a fan or ventilation grille for any interior of a bathroom or kitchen. |
| FPB 180/125 Glass-1 |  | Removable decorative front panels are a universal solution allowing to choose the design of a fan or ventilation grille for any interior of a bathroom or kitchen. |
| FPB 180/125 Glass-1 red |  | Removable decorative front panels are a universal solution allowing to choose the design of a fan or ventilation grille for any interior of a bathroom or kitchen. |
| FPB 180/125 Glass-1 black |  | Removable decorative front panels are a universal solution allowing to choose the design of a fan or ventilation grille for any interior of a bathroom or kitchen. |
| FP 180 Plain gold |  | Removable decorative front panels are a universal solution allowing to choose the design of a fan or ventilation grille for any interior of a bathroom or kitchen. |
| FP 180 Plain dim |  | Removable decorative front panels are a universal solution allowing to choose the design of a fan or ventilation grille for any interior of a bathroom or kitchen. |

## Backdraft dampers

| Name | Photo | Description |
|---|---|---|

| | | |
|---|---|---|
| KO 125 |  | Back valve is designed for domestic fan |

### Window vents

| Name | Photo | Description |
|---|---|---|
| PO 400 |  | Window ventilators for supply ventilation |

### Plastic

| Name | Photo | Description |
|---|---|---|
| MV 122 VK |  | Supply and exhaust hoods |

### Metal

| Name | Photo | Description |
|---|---|---|
| MVM 122 V N |  | Exhaust metal hoods |