125 D



Axial extract fans with thin front panels

- Sound pressure level LpA at 3 m: 35
- Casing material: Plastic

	Unit of measurement	125 D
Connected air duct size	mm	125
Phases	-	1
Minimum supply voltage	V	220
Maximum supply voltage	V	240
Power supply frequency	Hz	50
Rated power	W	16
Unit current	A	0.1
Maximum airflow	m³/h	180
Rotation speed at 50hz	-	2400
Sound pressure level LpA at 3 m	dB(A)	35
Weight	kg	0.74
Ambient air temperature min	°C	1
Ambient air temperature max	°C	40
Ingress protection rating	-	IP34
Impeller material	-	Plastic

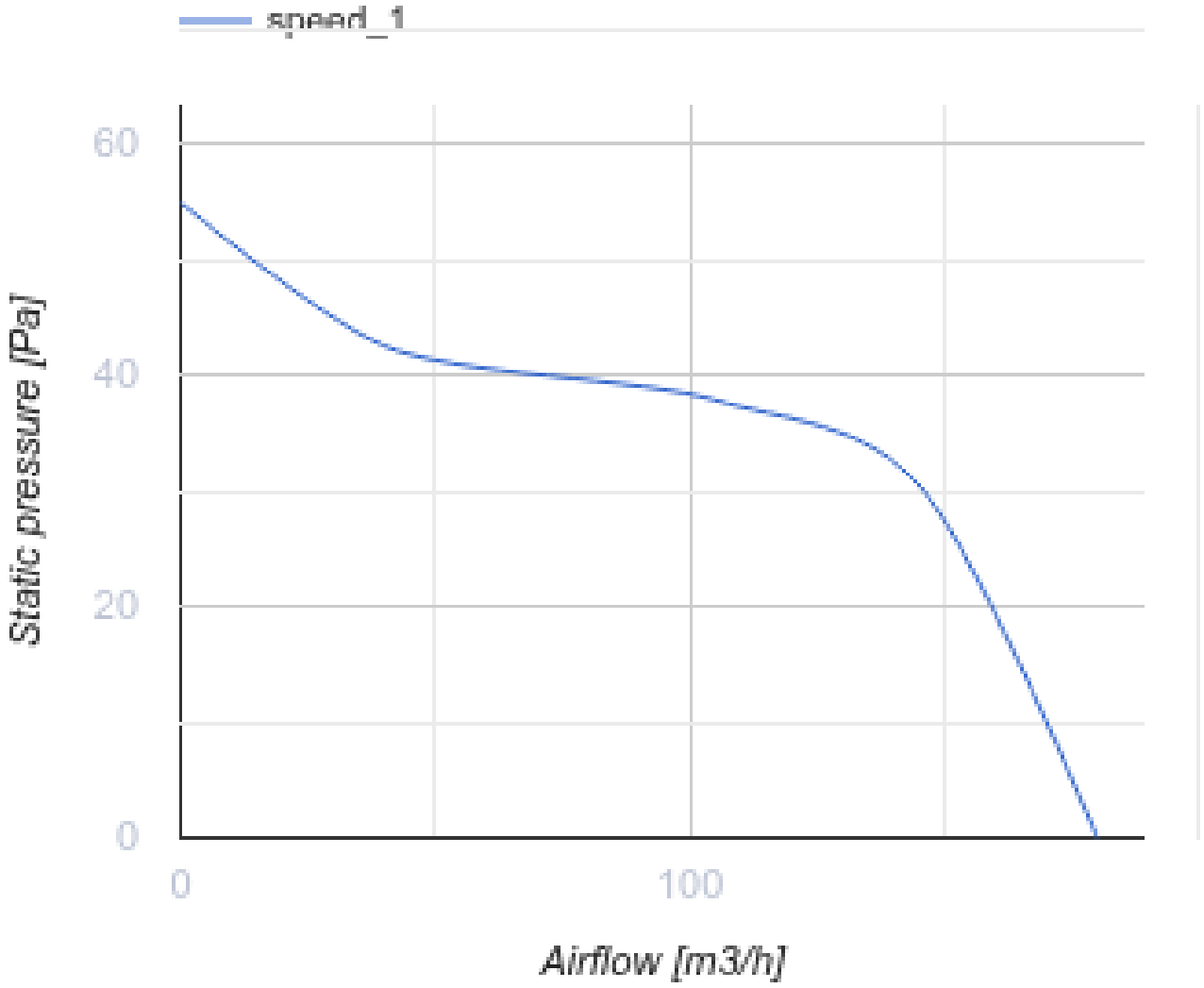

Dimensions

ØD	B	H	L	L1
125	176	140	114	12.5

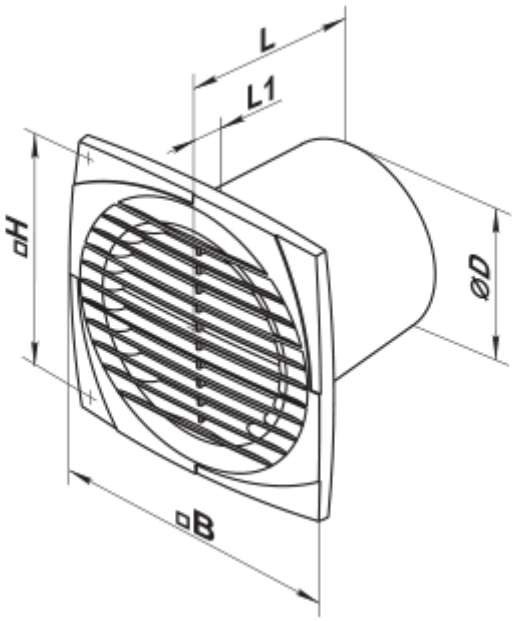

Accessories

Plastic

Name	Photo	Description
MV 120 V		Two-piece plastic grilles with angled louvers

Fittings

Name	Photo	Description
PVT 050/10		The adhesive PVC tape is an insulation tape made of plasticized PVC base covered with a glue layer
PVT 050/30		The adhesive PVC tape is an insulation tape made of plasticized PVC base covered with a glue layer
PVT 050/50		The adhesive PVC tape is an insulation tape made of plasticized PVC base covered with a glue layer
C 125		The clamps are designed for quick and reliable mounting and connection of various round ventilation system components. Clamps are made of stainless steel band

Round

Name	Photo	Description

2805		Wall mounting

Flexible ducts

Name	Photo	Description
Polyvent N		Flexible uninsulated air duct made of metallized film

Backdraft dampers

Name	Photo	Description
KO 125		Back valve is designed for domestic fan

Window vents

Name	Photo	Description
PO 400		Window ventilators for supply ventilation

Plastic

Name	Photo	Description
MV 122 VK		Supply and exhaust hoods

Metal

Name	Photo	Description
MVM 122 V N		Exhaust metal hoods

Ecodesign

Trademark	Vents					
Model	125 D					
Specific energy consumption (SEC) (kWh/(m²/a))	Cold		Average		Warm	
	-30.8	B	-14.4	E	-5	F
Type of ventilation unit	Unidirectional					
Type of drive installed	Single speed					
Type of heat recovery system	None					
Maximum flow rate (m³/h)	180					
Electric power input (W)	16					
Reference flow rate (m³/s)	0.035					
Specific power input (SPI) (W/(m³/h))	0.089					
Control typology	Manual control					
Maximum external leakage rates (%)	2.7					
Declared typology	RVU UVU					
Sound power level (dB(A))	55					
The annual electricity consumption (AEC) (kWh/a)	Cold		Average		Warm	
	111		111		111	
The annual heating saved (AHS) (kWh/a)	Cold		Average		Warm	
	3355		1715		776	