# 125 Simple TH



Axial extract fans with thin front panels

- Sound pressure level LpA at 3 m: 35
- Casing material: Plastic
- Humidity sensor
- Timer: Turn off timer

| | Unit of measurement | 125 Simple TH |
|---|---|---|
| Connected air duct size | mm | 125 |
| Phases | - | 1 |
| Minimum supply voltage | V | 220 |
| Maximum supply voltage | V | 240 |
| Power supply frequency | Hz | 50 |
| Rated power | W | 16 |
| Unit current | A | 0.1 |
| Maximum airflow | $m^3/h$ | 180 |
| Sound pressure level LpA at 3 m | dB(A) | 35 |
| Weight | kg | 0.74 |
| Ambient air temperature min | °C | 1 |
| Ambient air temperature max | °C | 40 |
| Ingress protection rating | - | IP34 |
| Impeller material | - | Plastic |

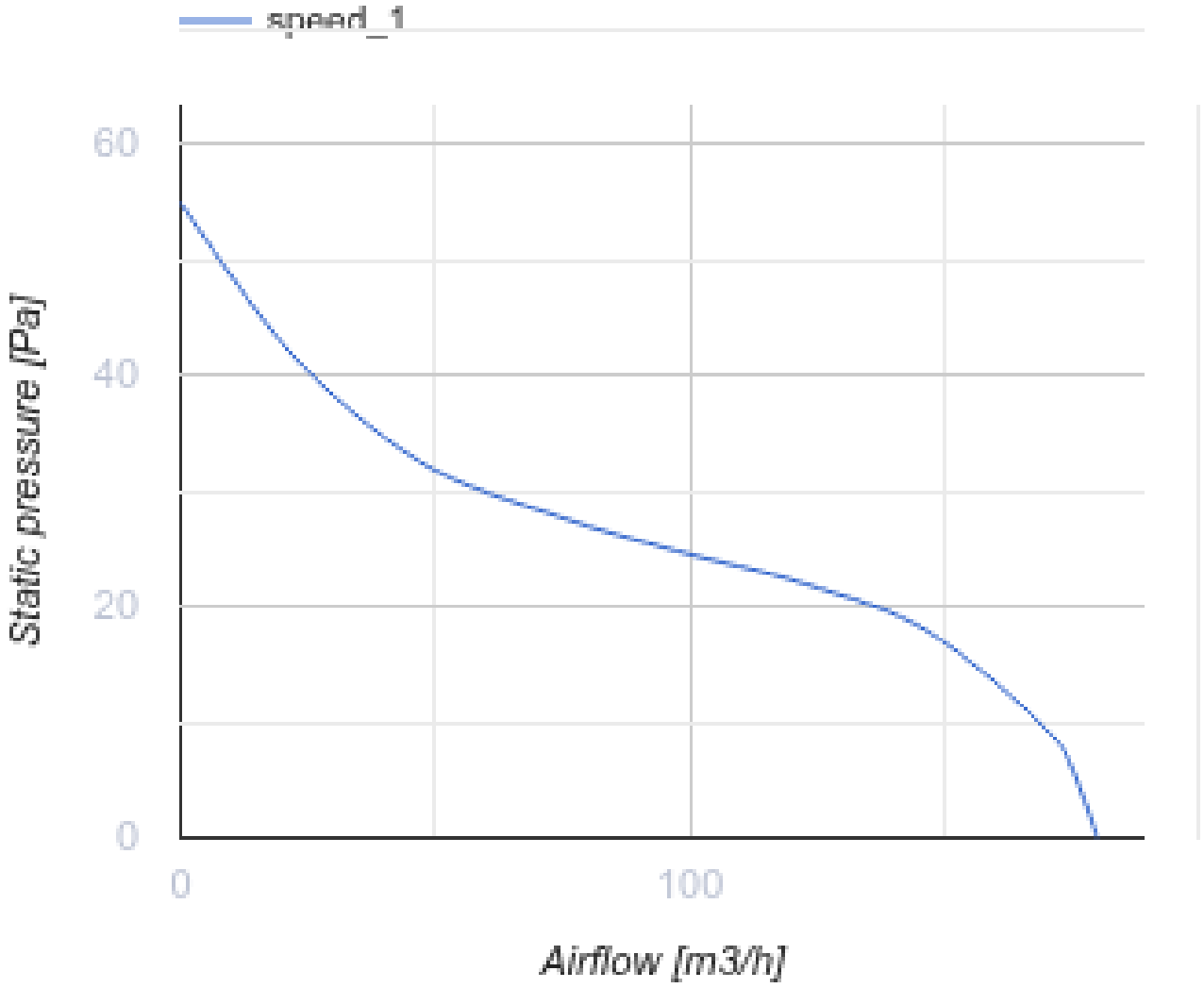


## Dimensions

| Ø D | B | L | L1 |
|---|---|---|---|
| 125 | 175 | 101 | 15 |

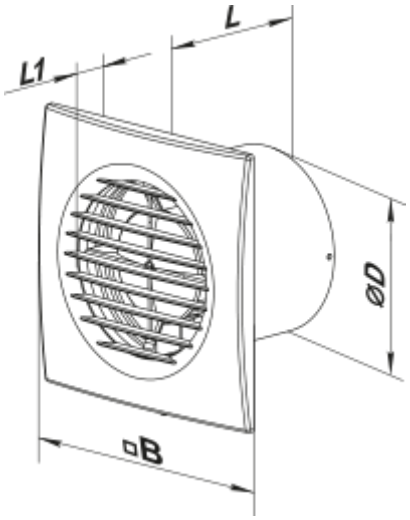


## Accessories

### Flanges

| Name | Photo | Description |
|---|---|---|
| FO 125 |  | The window flange |

## Ecodesign

| Trademark | Vents | | | | | |
|---|---|---|---|---|---|---|
| Model | 125 Simple TH | | | | | |
| Specific energy consumption (SEC) (kWh/(m²/a)) | Cold | | Average | | Warm | |
| | -53.6 | A+ | -26.5 | B | -11 | E |
| Type of ventilation unit | Unidirectional | | | | | |
| Type of drive installed | Single speed | | | | | |
| Type of heat recovery system | None | | | | | |
| Maximum flow rate (m³/h) | 180 | | | | | |
| Electric power input (W) | 16 | | | | | |
| Reference flow rate (m³/s) | 0.035 | | | | | |
| Specific power input (SPI) (W/(m³/h)) | 0.089 | | | | | |
| Control typology | Local demand control | | | | | |
| Maximum external leakage rates (%) | 2.7 | | | | | |
| Declared typology | RVU UVU | | | | | |
| Sound power level (dB(A)) | 55 | | | | | |
| The annual electricity consumption (AEC) (kWh/a) | Cold | | Average | | Warm | |
| | 72 | | 72 | | 72 | |
| The annual heating saved (AHS) (kWh/a) | Cold | | Average | | Warm | |
| | 5536 | | 2830 | | 1280 | |