125 Simple turbo



Axial extract fans with thin front panels

- Sound pressure level LpA at 3 m: 37
- Casing material: Plastic

	Unit of measurement	125 Simple turbo
Connected air duct size	mm	125
Phases	-	1
Minimum supply voltage	V	220
Maximum supply voltage	V	240
Power supply frequency	Hz	50
Rated power	W	24
Unit current	A	0.105
Maximum airflow	m^3/h	226
Sound pressure level LpA at 3 m	dB(A)	37
Weight	kg	0.81
Ambient air temperature min	°C	1
Ambient air temperature max	°C	40
Ingress protection rating	-	IP34
Impeller material	-	Plastic

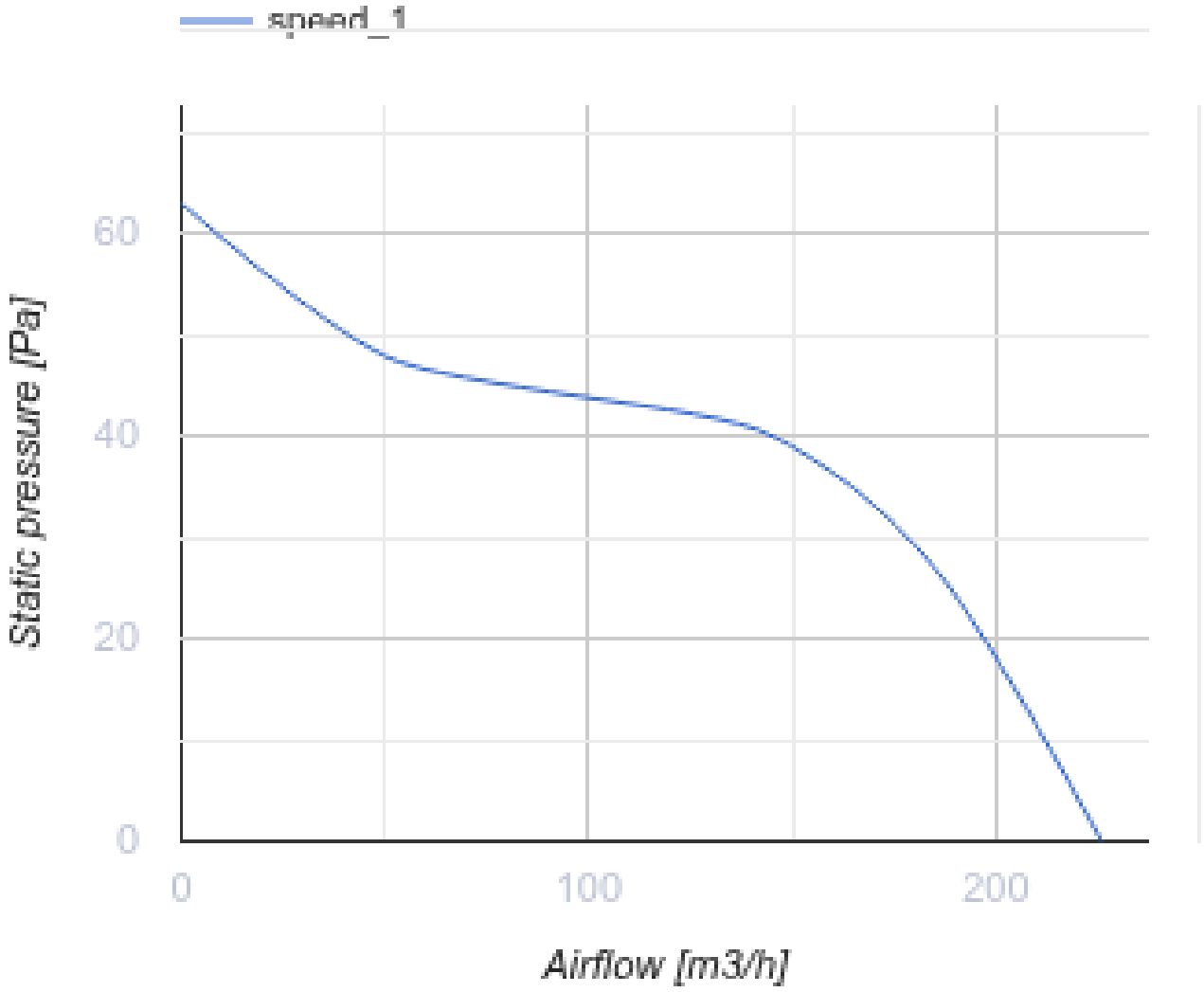

Dimensions

Ø D	B	L	L1
125	175	101	15

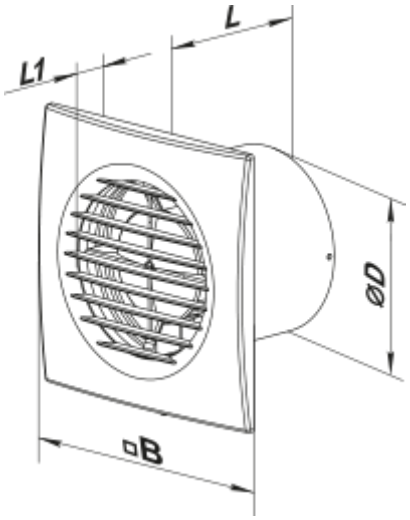

Accessories

Flanges

Name	Photo	Description
FO 125		The window flange

Ecodesign

Trademark	Vents					
Model	125 Simple turbo					
Specific energy consumption (SEC) (kWh/(m²/a))	Cold		Average		Warm	
	-30.2	B	-13.8	E	-4.4	F
Type of ventilation unit	Unidirectional					
Type of drive installed	Single speed					
Type of heat recovery system	None					
Maximum flow rate (m³/h)	226					
Electric power input (W)	24					
Reference flow rate (m³/s)	0.044					
Specific power input (SPI) (W/(m³/h))	0.106					
Control typology	Manual control					
Maximum external leakage rates (%)	2.7					
Sound power level (dB(A))	57					
Declared typology	RVU UVU					
The annual electricity consumption (AEC) (kWh/a)	Cold		Average		Warm	
	133		133		133	
The annual heating saved (AHS) (kWh/a)	Cold		Average		Warm	
	3355		1715		776	