125 VKO1 T L turbo



Axial high-performance inline fans for extract or supply ventilation with high performance

- Sound pressure level LpA at 3 m: 39
- Casing material: Plastic
- Timer: Turn off timer
- Ball bearing

	Unit of measurement	125 VKO1 T L turbo
Connected air duct size	mm	125
Phases	-	1
Minimum supply voltage	V	220
Maximum supply voltage	V	240
Power supply frequency	Hz	50/60
Rated power	W	24
Unit current	A	0.105
Maximum airflow	m³/h	245
Rotation speed at 50hz	-	2400
Sound pressure level LpA at 3 m	dB(A)	39
Weight	kg	0.51
Ambient air temperature min	°C	1
Ambient air temperature max	°C	40
Ingress protection rating	-	IPX4
Impeller material	-	Plastic

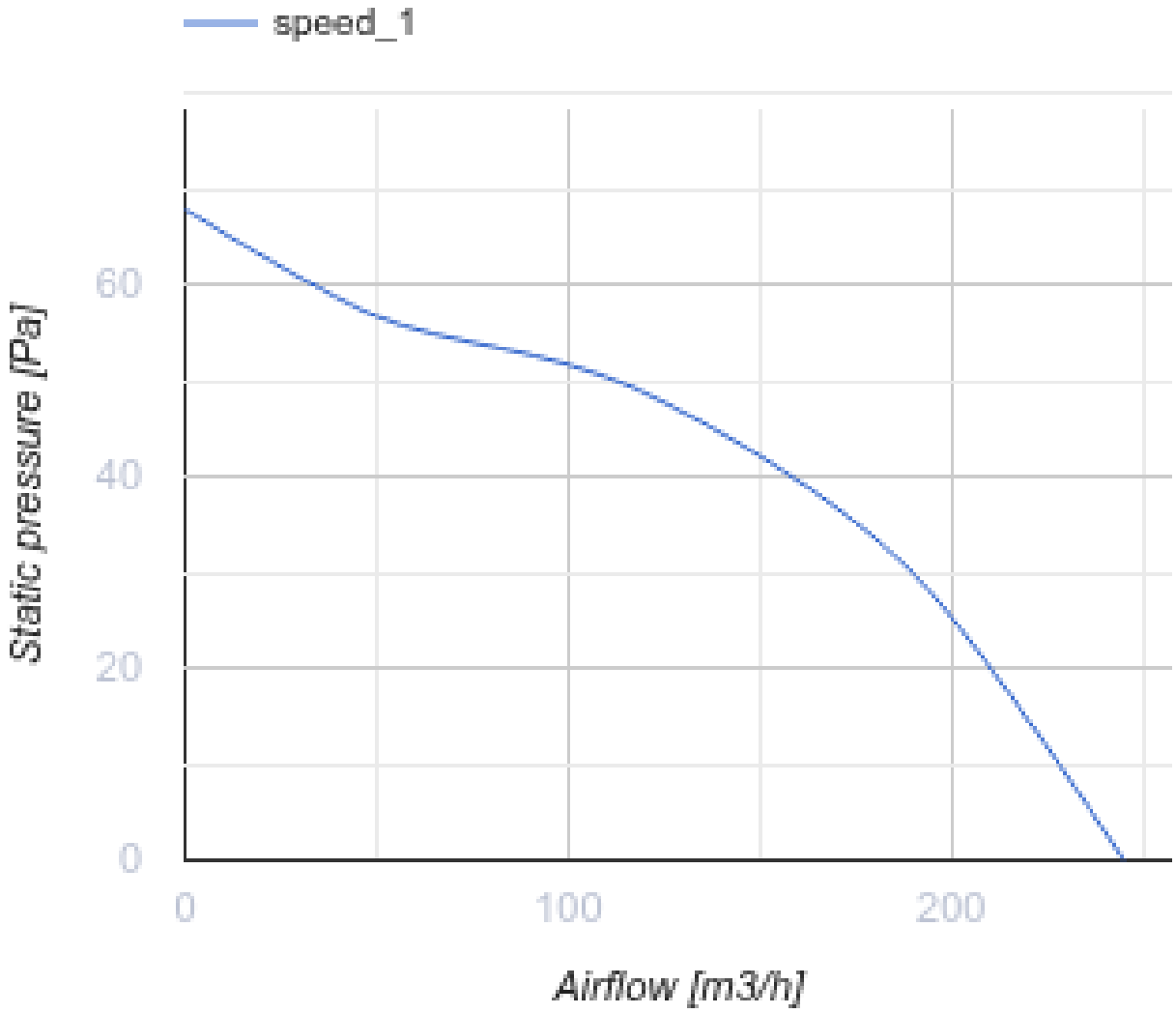

Dimensions

ØD	Ød	L	L1
125	59	90	28

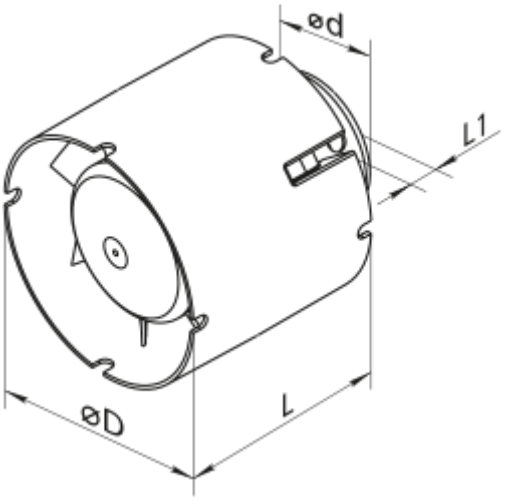
ød
L1
øD
L