125 VKO1 turbo



Axial high-performance inline fans for extract or supply ventilation with high performance

- Sound pressure level LpA at 3 m: 39
- Casing material: Plastic

	Unit of measurement	125 VKO1 turbo
Connected air duct size	mm	125
Phases	-	1
Minimum supply voltage	V	220
Maximum supply voltage	V	240
Power supply frequency	Hz	50/60
Rated power	W	24
Unit current	A	0.105
Maximum airflow	m³/h	245
Rotation speed at 50hz	-	2400
Sound pressure level LpA at 3 m	dB(A)	39
Weight	kg	0.51
Ambient air temperature min	°C	1
Ambient air temperature max	°C	40
Ingress protection rating	-	IPX4
Impeller material	-	Plastic

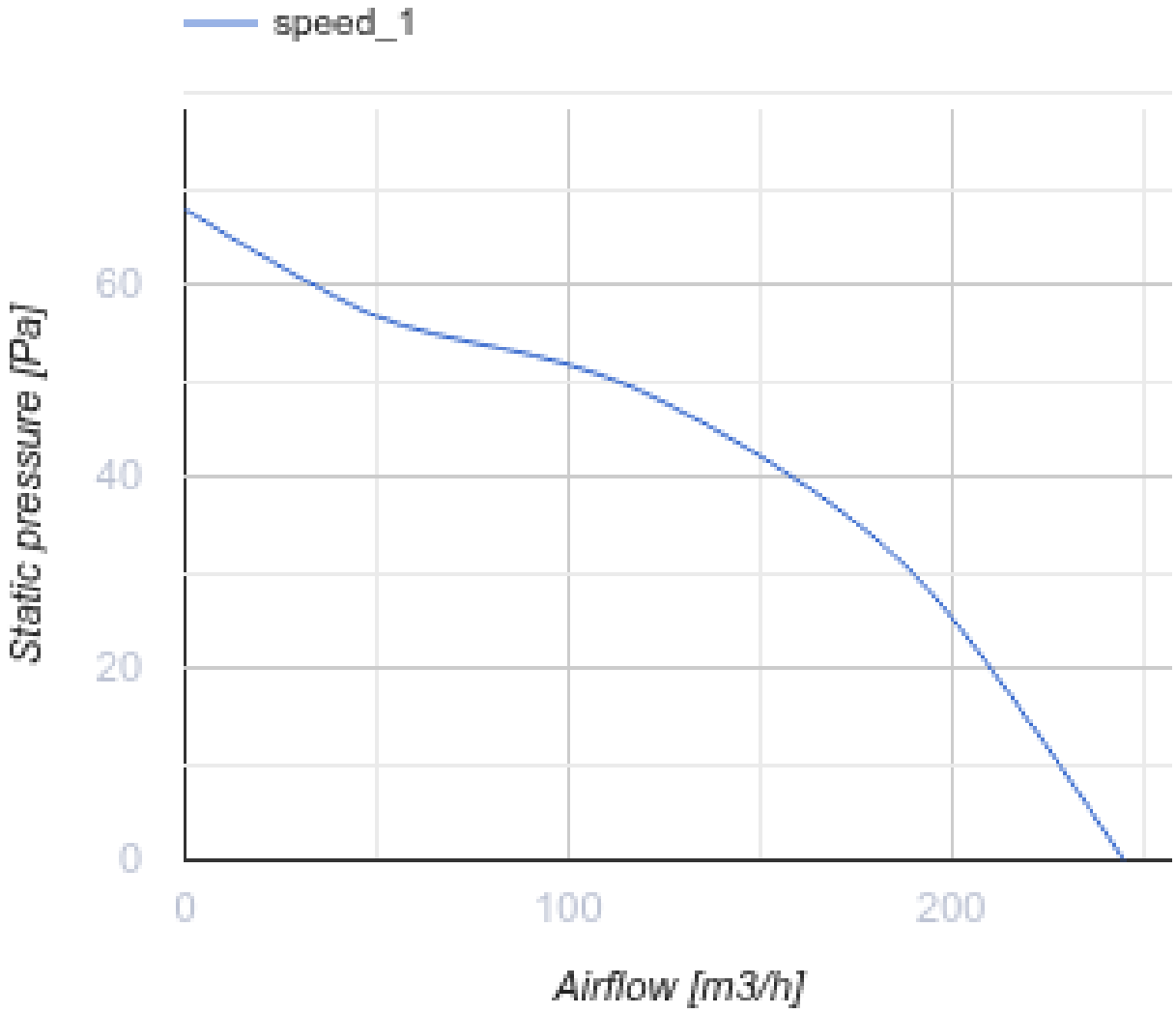

Dimensions

ØD	Ød	L	L1
125	59	90	28

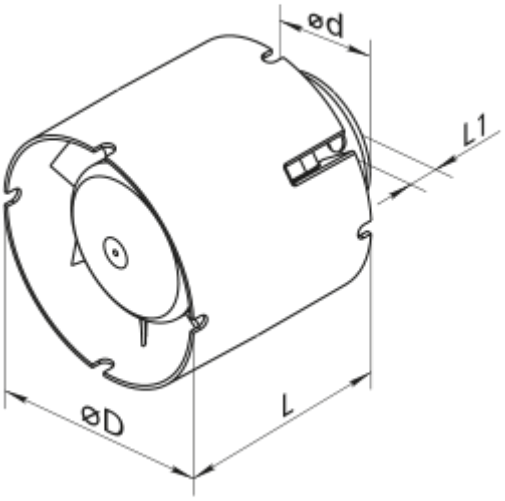
ød
L1
øD
L

Ecodesign

Trademark	Vents					
Model	125 VKO1 turbo					
Specific energy consumption (SEC) (kWh/(m²/a))	Cold		Average		Warm	
	-32	B	-15	E	-6	F
Type of ventilation unit	Unidirectional					
Type of drive installed	Multi-speed					
Type of heat recovery system	None					
Maximum flow rate (m³/h)	245					
Electric power input (W)	24					
Reference flow rate (m³/s)	0.048					
Specific power input (SPI) (W/(m³/h))	0.063					
Control typology	Manual control					
Maximum external leakage rates (%)	2.7					
Declared typology	RVU UVU					
Sound power level (dB(A))	59					
The annual electricity consumption (AEC) (kWh/a)	Cold		Average		Warm	
	100		100		100	
The annual heating saved (AHS) (kWh/a)	Cold		Average		Warm	
	3400		1700		800	