125 VKO1k

Axial high-performance inline fans for extract or supply ventilation with high performance

- Sound pressure level LpA at 3 m: 38
- Casing material: Plastic

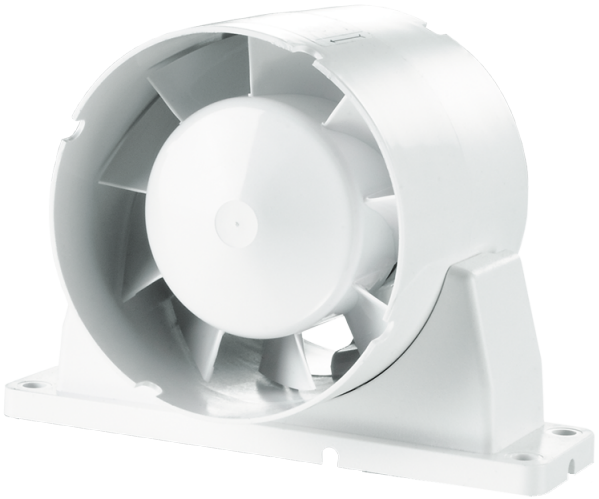

	Unit of measurement	125 VKO1k
Connected air duct size	mm	125
Phases	-	1
Minimum supply voltage	V	220
Maximum supply voltage	V	240
Power supply frequency	Hz	50/60
Rated power	W	16
Unit current	A	0.1
Maximum airflow	m³/h	190
Rotation speed at 50hz	-	2400
Sound pressure level LpA at 3 m	dB(A)	38
Weight	kg	0.43
Ambient air temperature min	°C	1
Ambient air temperature max	°C	40
Ingress protection rating	-	IPX4
Impeller material	-	Plastic

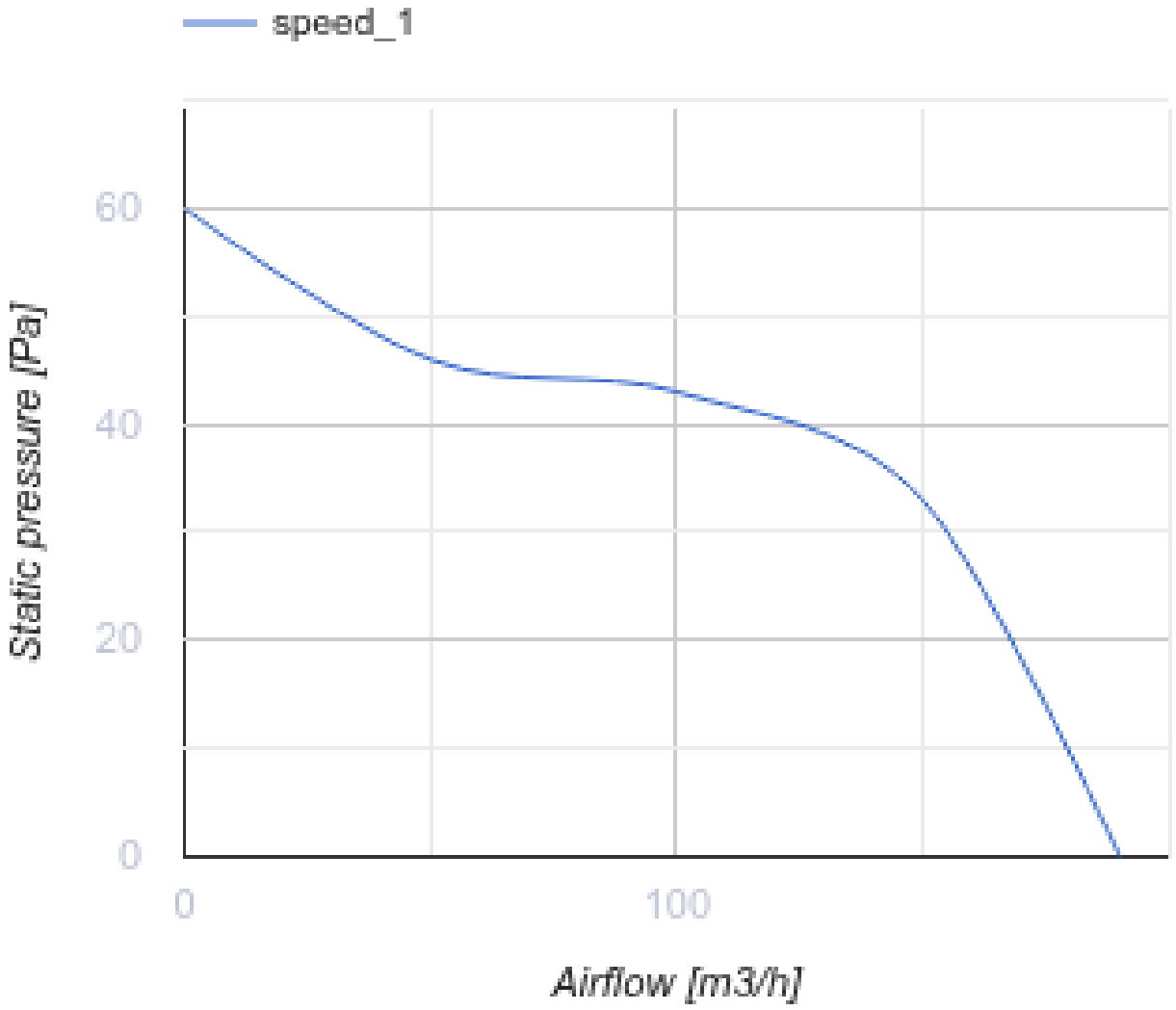

Dimensions

ØD	Ød	B	B1	H	L	L1	L2	L3
125	59	185	169	125	90	28	45	29

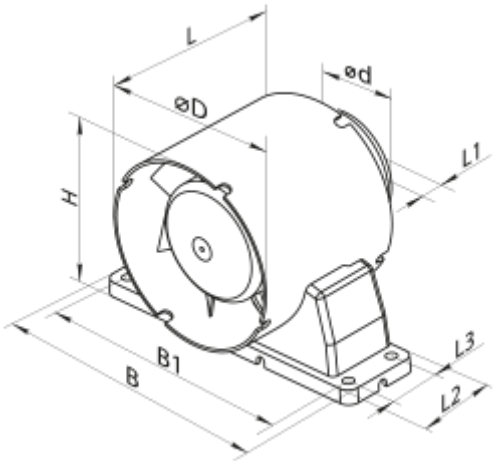
L
ød
øD
L1
H
B1
B
L3
L2