125 X1 L turbo



Axial extract fans with thin front panels

- Sound pressure level LpA at 3 m: 37
- Casing material: Plastic
- Ball bearing

	Unit of measurement	125 X1 L turbo
Connected air duct size	mm	125
Phases	-	1
Minimum supply voltage	V	220
Maximum supply voltage	V	240
Power supply frequency	Hz	50
Rated power	W	24
Unit current	A	0.105
Maximum airflow	m^3/h	232
Rotation speed at 50hz	-	2400
Sound pressure level LpA at 3 m	dB(A)	37
Weight	kg	0.8
Ambient air temperature min	°C	1
Ambient air temperature max	°C	40
Ingress protection rating	-	IP24
Impeller material	-	Plastic

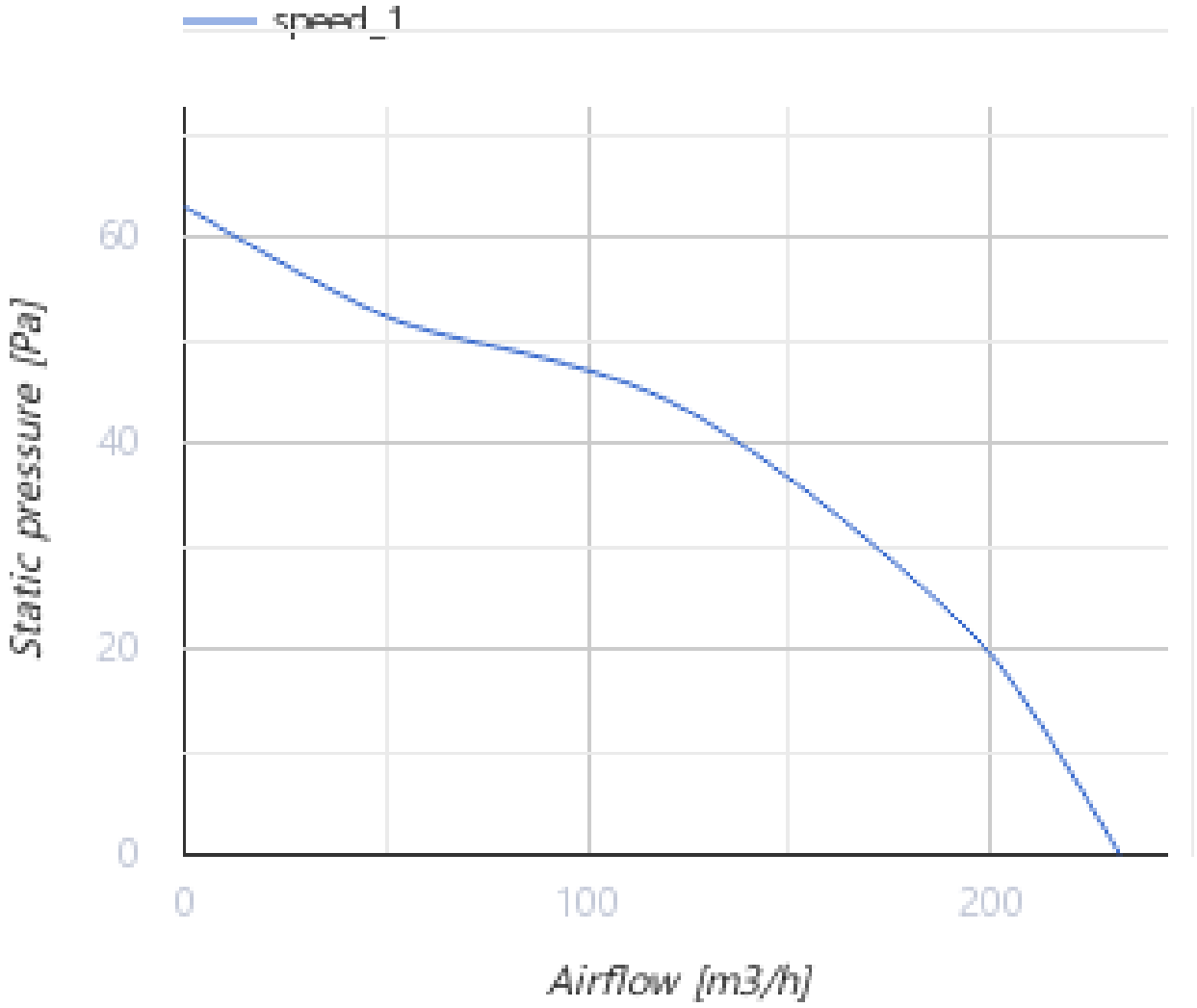

Dimensions

Ø D	B	H	L	L1
125	177	140	114	13

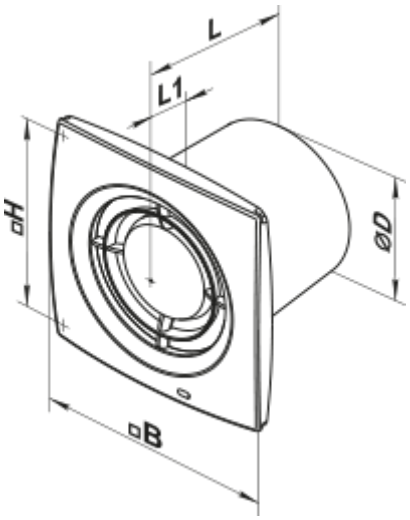

Accessories

Plastic

Name	Photo	Description
MV 120 V		Two-piece plastic grilles with angled louvers

Fittings

Name	Photo	Description
PVT 050/10		The adhesive PVC tape is an insulation tape made of plasticized PVC base covered with a glue layer
PVT 050/30		The adhesive PVC tape is an insulation tape made of plasticized PVC base covered with a glue layer
PVT 050/50		The adhesive PVC tape is an insulation tape made of plasticized PVC base covered with a glue layer
C 125		The clamps are designed for quick and reliable mounting and connection of various round ventilation system components. Clamps are made of stainless steel band

Round

Name	Photo	Description
2805		Wall mounting

Flexible ducts

Name	Photo	Description

Polyvent N		Flexible uninsulated air duct made of metallized film

Backdraft dampers

Name	Photo	Description
KO 125		Back valve is designed for domestic fan

Window vents

Name	Photo	Description
PO 400		Window ventilators for supply ventilation

Plastic

Name	Photo	Description
MV 122 VK		Supply and exhaust hoods

Metal

Name	Photo	Description
MVM 122 V N		Exhaust metal hoods