# 150 Silenta-SV (220 V/60 Hz)

Quiet axial extract fans with thin front panels

- Impeller type: Axial
- Casing material: Plastic
- Pull cord




| | Unit of measurement | 150 Silenta-SV (220 V/60 Hz) |
|---|---|---|
| Connected air duct size | mm | 150 |
| Minimum supply voltage | V | 220 |
| Maximum supply voltage | V | 220 |
| Power supply frequency | Hz | 60 |
| Weight | kg | 0.85 |
| Ambient air temperature min | °C | 1 |
| Ambient air temperature max | °C | 40 |
| Ingress protection rating | - | IP34 |
| Impeller material | - | Plastic |

## Dimensions

| Ø D | B | H | L | L1 |
|---|---|---|---|---|
| 150 | 205 | 165 | 132 | 14 |

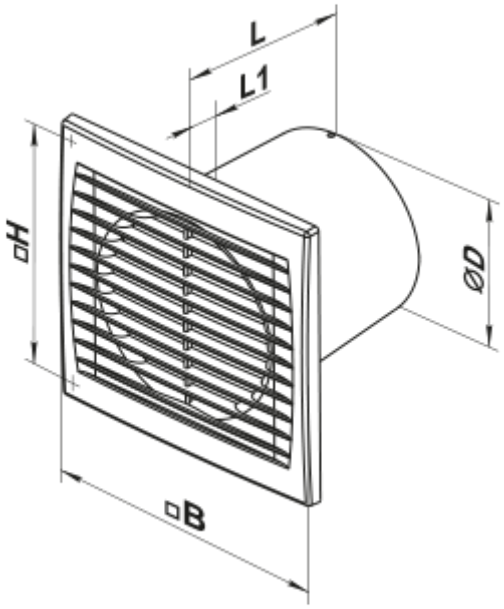


## Accessories

### Plastic

| Name | Photo | Description |
|---|---|---|
| MV 150 V |  | Two-piece plastic grilles with angled louvers, round flange |

### Fittings

| Name | Photo | Description |
|---|---|---|
| PVT 050/10 |  | The adhesive PVC tape is an insulation tape made of plasticized PVC base covered with a glue layer |
| PVT 050/30 |  | The adhesive PVC tape is an insulation tape made of plasticized PVC base covered with a glue layer |
| PVT 050/50 |  | The adhesive PVC tape is an insulation tape made of plasticized PVC base covered with a glue layer |
| C 150 |  | The clamps are designed for quick and reliable mounting and connection of various round ventilation system components. Clamps are made of stainless steel band |

### Round

| Name | Photo | Description |
|---|---|---|
| 3805 |  | Wall mounting |

### Flexible ducts

| Name | Photo | Description |
|---|---|---|
| Polyvent N |  | Flexible uninsulated air duct made of metallized film |

### Backdraft dampers

| Name | Photo | Description |
|---|---|---|
| KO 150 |  | Back valve is designed for domestic fan |

### Window vents

| Name | Photo | Description |
|---|---|---|
| PO 400 |  | Window ventilators for supply ventilation |

### Plastic

| Name | Photo | Description |
|---|---|---|
| MV 152 VK |  | Supply and exhaust hoods |

### Metal

| Name | Photo | Description |
|---|---|---|
| MVM 152 V N |  | Exhaust metal hoods |