150 Simple T



Axial extract fans with thin front panels

- Sound pressure level LpA at 3 m: 34
- Casing material: Plastic
- Timer: Turn off timer

	Unit of measurement	150 Simple T
Connected air duct size	mm	150
Phases	-	1
Minimum supply voltage	V	220
Maximum supply voltage	V	240
Power supply frequency	Hz	50
Rated power	W	25
Unit current	A	0.17
Maximum airflow	m³/h	280
Sound pressure level LpA at 3 m	dB(A)	34
Weight	kg	0.92
Ambient air temperature min	°C	1
Ambient air temperature max	°C	40
Ingress protection rating	-	IP34
Impeller material	-	Plastic

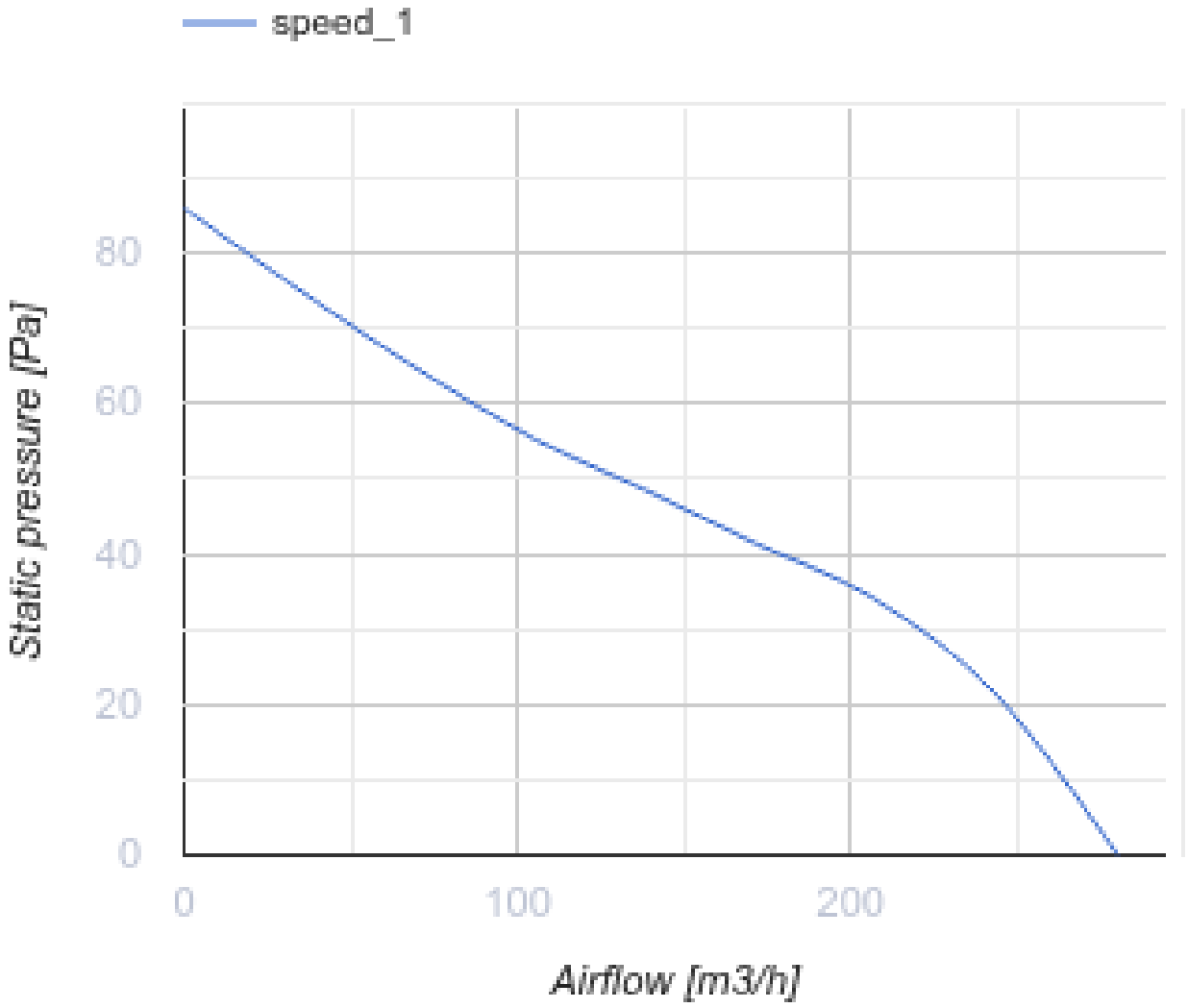

Dimensions

Ø D	B	L	L1
150	205	117	15

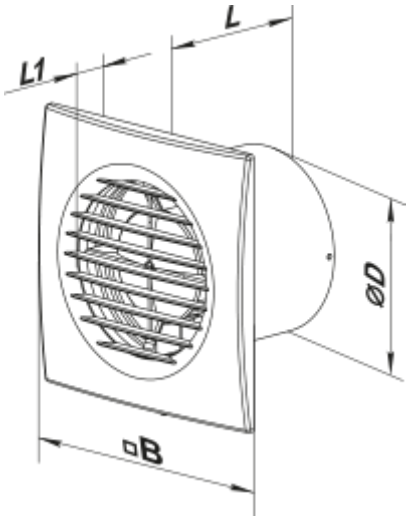

Accessories

Flanges

Name	Photo	Description
FO 150		The window flange

Ecodesign

Trademark	Vents					
Model	150 Simple T					
Specific energy consumption (SEC) (kWh/(m²/a))	Cold		Average		Warm	
	-34	A	-16.1	E	-5.8	F
Type of ventilation unit	Unidirectional					
Type of drive installed	Single speed					
Type of heat recovery system	None					
Maximum flow rate (m³/h)	280					
Electric power input (W)	25					
Reference flow rate (m³/s)	0.054					
Specific power input (SPI) (W/(m³/h))	0.089					
Control typology	Clock control					
Maximum external leakage rates (%)	2.7					
Declared typology	RVU UVU					
Sound power level (dB(A))	54					
The annual electricity consumption (AEC) (kWh/a)	Cold		Average		Warm	
	106		106		106	
The annual heating saved (AHS) (kWh/a)	Cold		Average		Warm	
	3667		1874		848	