150 VKO1 press



Axial high-performance inline fans for extract or supply ventilation with high performance

- Sound pressure level LpA at 3 m: 42
- Casing material: Plastic

	Unit of measurement	150 VKO1 press
Connected air duct size	mm	150
Phases	-	1
Minimum supply voltage	V	220
Maximum supply voltage	V	240
Power supply frequency	Hz	50
Rated power	W	36
Unit current	A	0.16
Maximum airflow	m³/h	317
Rotation speed at 50hz	-	2400
Sound pressure level LpA at 3 m	dB(A)	42
Weight	kg	0.8
Ambient air temperature min	°C	1
Ambient air temperature max	°C	40
Ingress protection rating	-	IPX4
Impeller material	-	Plastic

Dimensions

ØD	Ød	L	L1
150	59	100	28

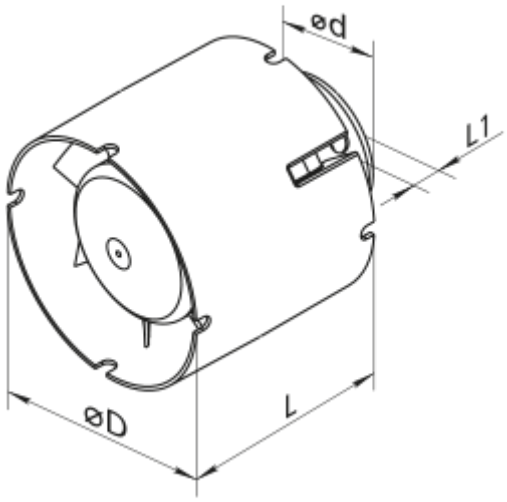

Ecodesign

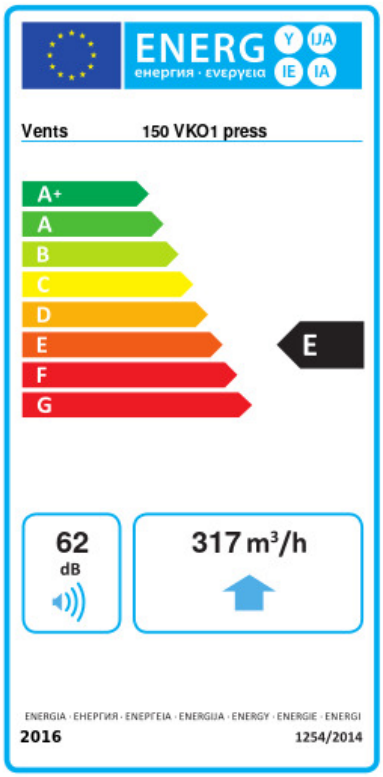

Trademark	Vents					
Model	150 VKO1 press					
Specific energy consumption (SEC) (kWh/(m²/a))	Cold		Average		Warm	
	-31.3	B	-14.9	E	-5.5	F
Type of ventilation unit	Unidirectional					
Type of drive installed	Multi-speed					
Type of heat recovery system	None					
Maximum flow rate (m³/h)	317					
Electric power input (W)	36					
Reference flow rate (m³/s)	0.062					
Specific power input (SPI) (W/(m³/h))	0.073					
Control typology	Manual control					
Maximum external leakage rates (%)	2.7					
Declared typology	RVU UVU					
Sound power level (dB(A))	62					
The annual electricity consumption (AEC) (kWh/a)	Cold		Average		Warm	
	91		91		91	
The annual heating saved (AHS) (kWh/a)	Cold		Average		Warm	
	3355		1715		776	