150 VKOk L



Axial high-performance inline fans for extract or supply ventilation

- Sound pressure level LpA at 3 m: 40
- Casing material: Plastic
- Ball bearing

	Unit of measurement	150 VKOk L
Connected air duct size	mm	150
Phases	-	1
Minimum supply voltage	V	220
Maximum supply voltage	V	240
Power supply frequency	Hz	50
Rated power	W	24
Unit current	A	0.13
Maximum airflow	m³/h	298
Rotation speed at 50hz	-	2400
Sound pressure level LpA at 3 m	dB(A)	40
Weight	kg	0.8
Ambient air temperature min	°C	1
Ambient air temperature max	°C	40
Ingress protection rating	-	IPX4
Impeller material	-	Plastic

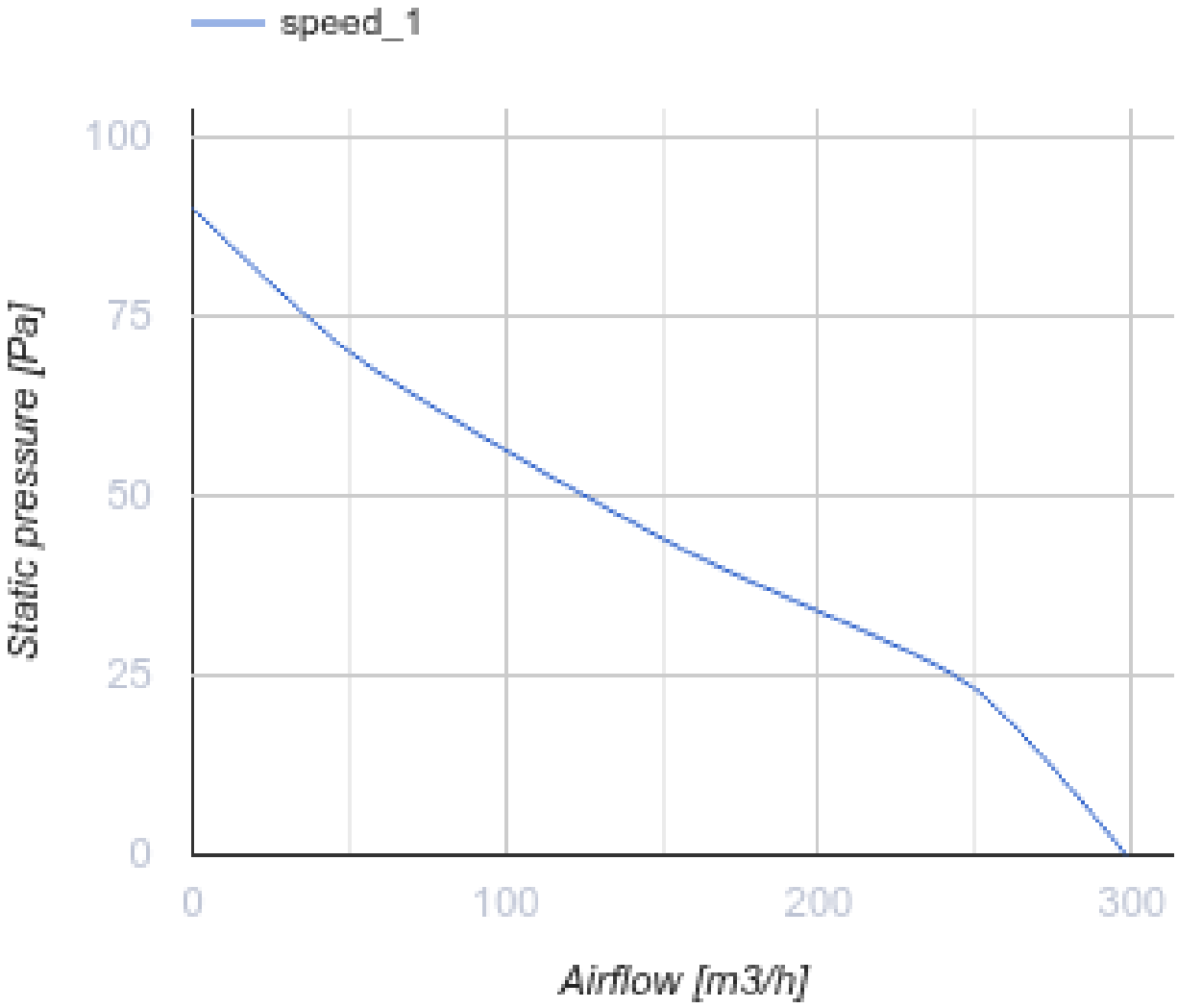

Dimensions

ØD	ØD1	B	B1	H	L	L1	L2	L3
150	154	200	184	163	108	46	45	29

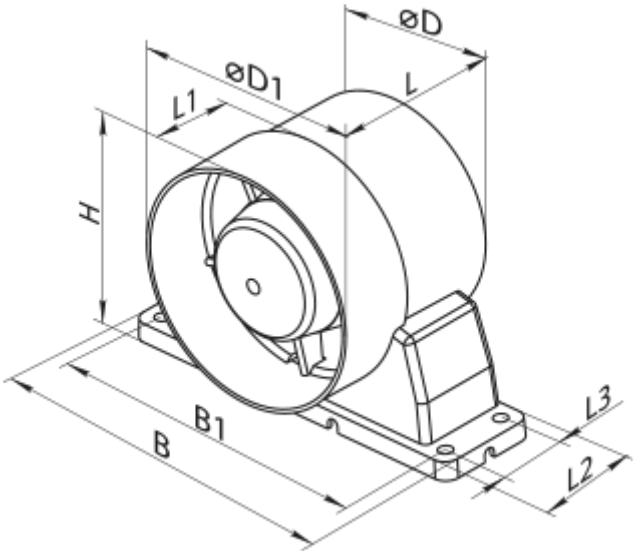
øD
øD1
L
L1
H
B1
B
L3
L2