Ab DP 225x225/100



For connection of the square ceiling diffusers DP to round air ducts

- Casing material: Galvanized steel

	Unit of measurement	Ab DP 225x225/100
Connected air duct size	mm	100
Weight	kg	0.62

Dimensions

l	h	ØD	K
113.6	113.6	100	178.6

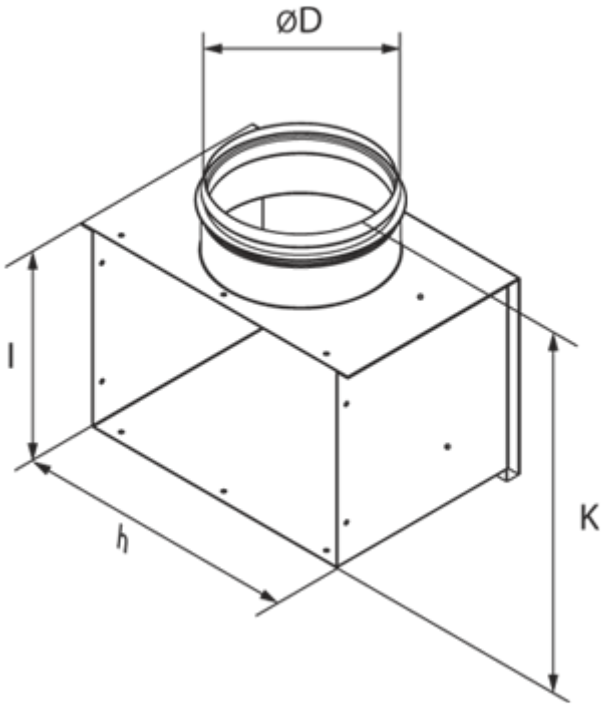
ØD
l
h
K