Ab DP 260x260/100



For connection of the square ceiling diffusers DP to round air ducts

- Casing material: Galvanized steel

	Unit of measurement	Ab DP 260x260/100
Connected air duct size	mm	100
Weight	kg	0.83

Dimensions

l	h	ØD	K
148.6	148.6	100	213.6

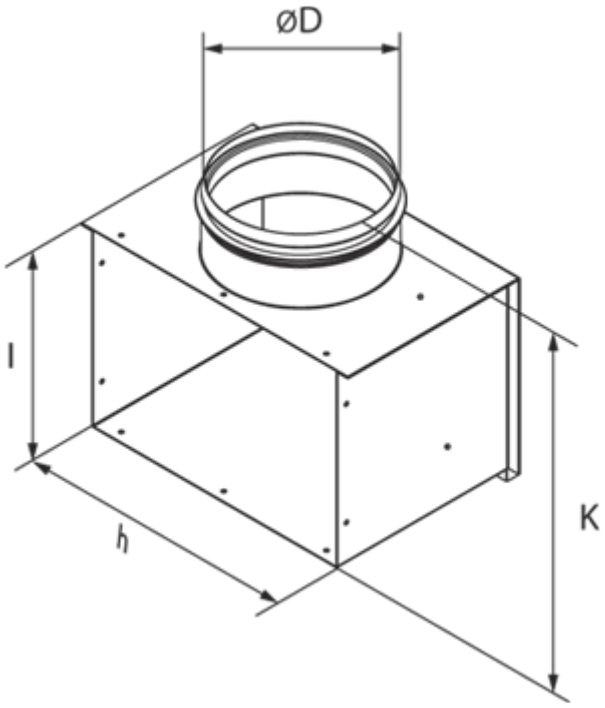
ØD
l
h
K