Ab DP 300x300/150



For connection of the square ceiling diffusers DP to round air ducts

- Casing material: Galvanized steel

	Unit of measurement	Ab DP 300x300/150
Connected air duct size	mm	150
Weight	kg	1.3

Dimensions

l	h	ØD	K
188.6	188.6	150	253.6

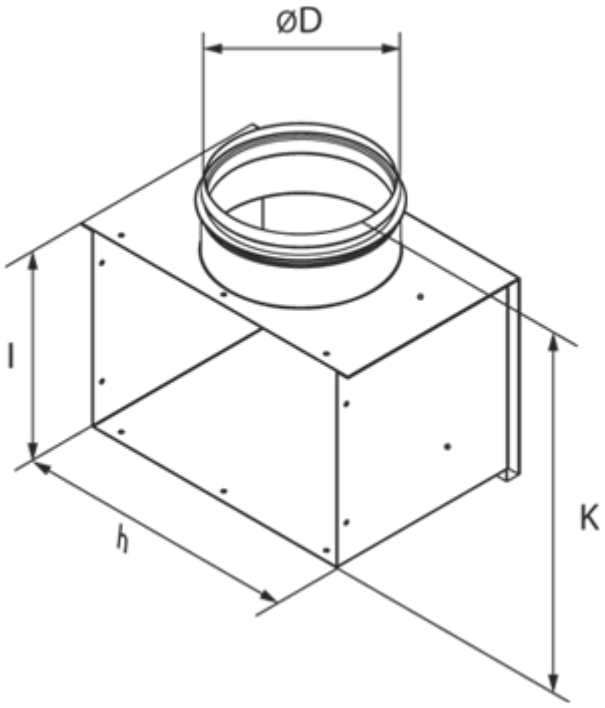
ØD
l
h
K