Ab DP 325x325/100



For connection of the square ceiling diffusers DP to round air ducts

- Casing material: Galvanized steel

	Unit of measurement	Ab DP 325x325/100
Connected air duct size	mm	100
Weight	kg	1.2

Dimensions

l	h	ØD	K
213.6	213.6	100	278.6

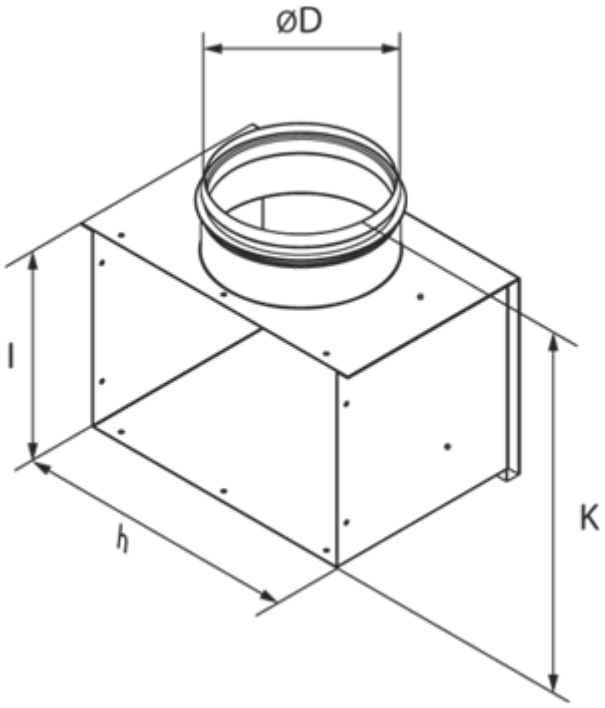
ØD
l
h
K