Ab DP 394x394/200



For connection of the square ceiling diffusers DP to round air ducts

- Casing material: Galvanized steel

	Unit of measurement	Ab DP 394x394/200
Connected air duct size	mm	200
Weight	kg	2.4

Dimensions

l	h	ØD	K
282.6	282.6	200	347.6

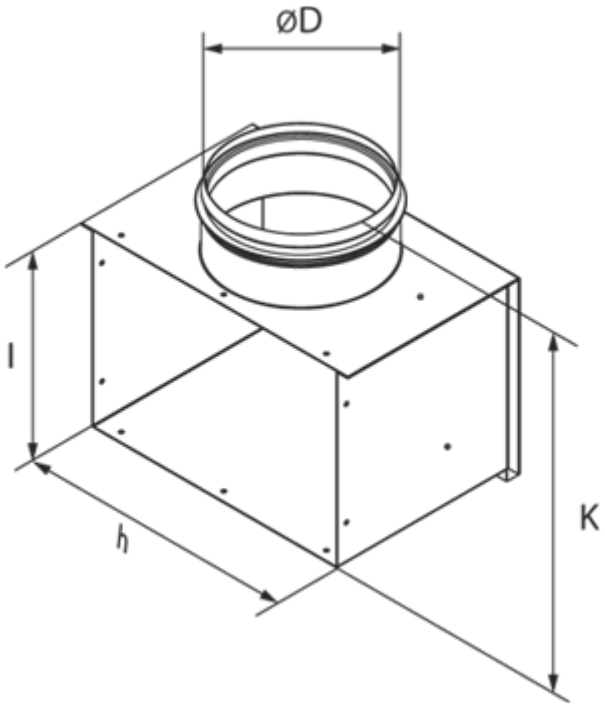
ØD
l
h
K