Ab DP 460x460/200



For connection of the square ceiling diffusers DP to round air ducts

- Casing material: Galvanized steel

	Unit of measurement	Ab DP 460x460/200
Connected air duct size	mm	200
Weight	kg	3.12

Dimensions

l	h	ØD	K
348.6	348.6	200	413.6

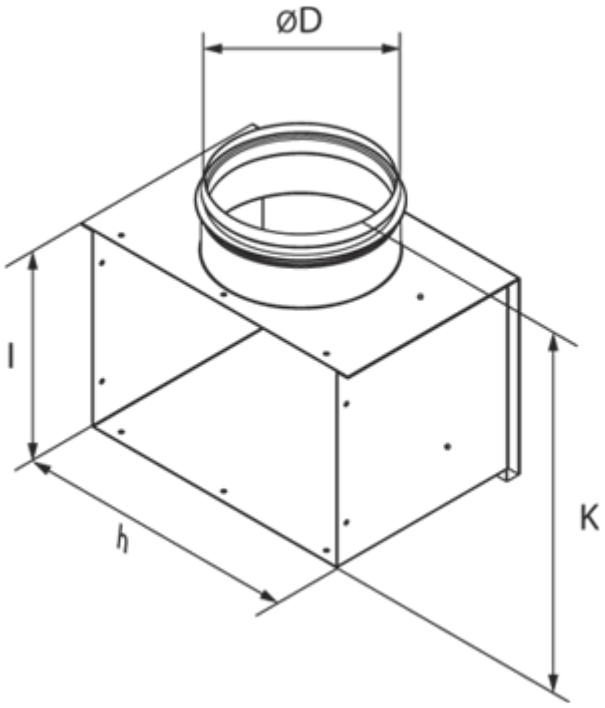
ØD
l
h
K