Ab DP 460x460/250



For connection of the square ceiling diffusers DP to round air ducts

- Casing material: Galvanized steel

	Unit of measurement	Ab DP 460x460/250
Connected air duct size	mm	250
Weight	kg	3.5

Dimensions

l	h	ØD	K
348.6	348.6	250	413.6

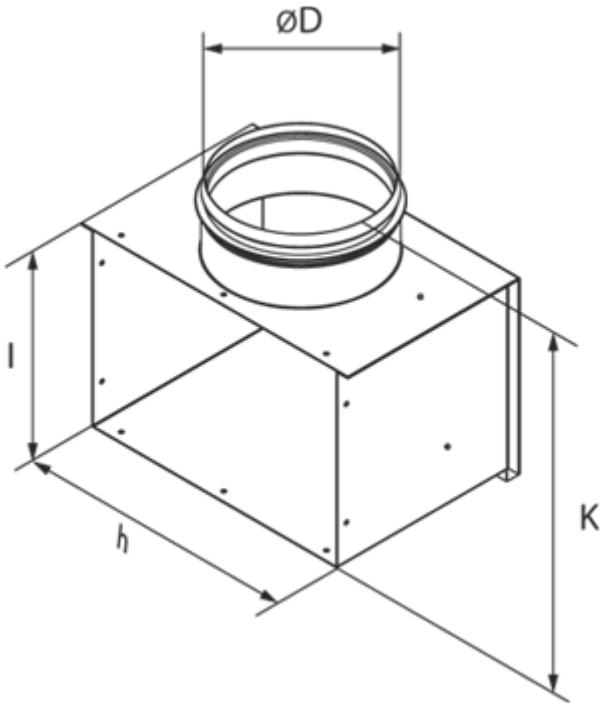
ØD
l
h
K