Ab DP 530x460/315



For connection of the square ceiling diffusers DP to round air ducts

- Casing material: Galvanized steel

	Unit of measurement	Ab DP 530x460/315
Connected air duct size	mm	315
Weight	kg	4.4

Dimensions

l	h	ØD	K
418.6	348.6	315	413.6

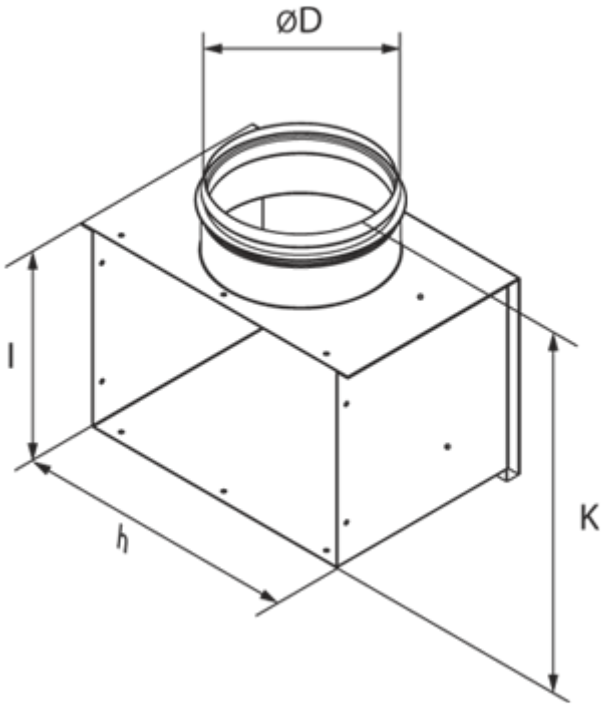
ØD
l
h
K