Ab DP 596x596/160



For connection of the square ceiling diffusers DP to round air ducts

- Casing material: Galvanized steel

	Unit of measurement	Ab DP 596x596/160
Connected air duct size	mm	160
Weight	kg	4.2

Dimensions

l	h	ØD	K
484.6	484.6	160	549.6

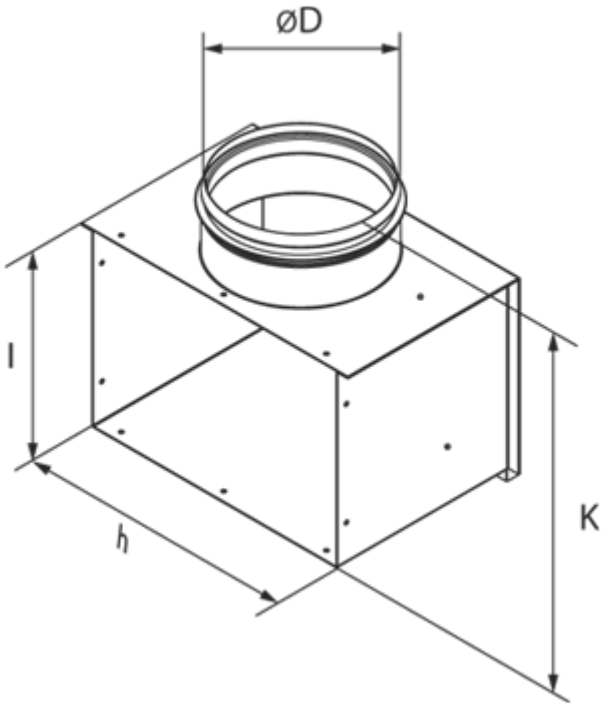
ØD
l
h
K