Ab DP 620x620/250



For connection of the square ceiling diffusers DP to round air ducts

- Casing material: Galvanized steel

	Unit of measurement	Ab DP 620x620/250
Connected air duct size	mm	250
Weight	kg	6.75

Dimensions

l	h	ØD	K
508.6	508.6	250	573.6

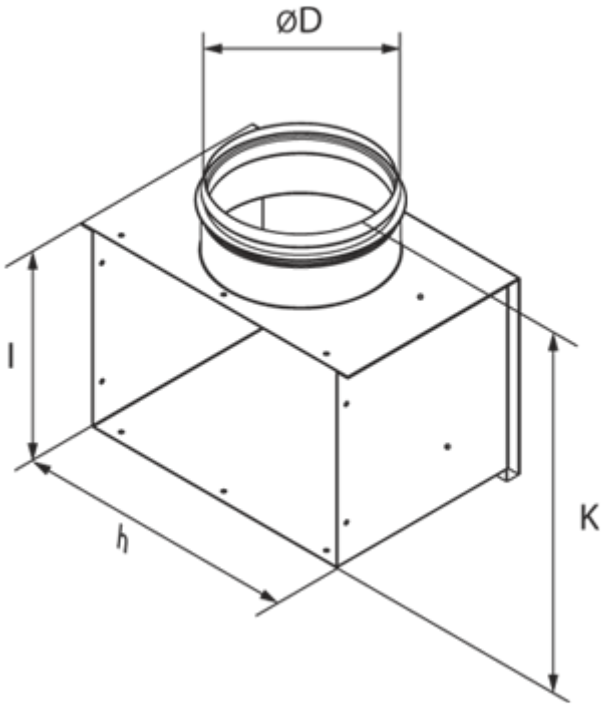
ØD
l
h
K