Ab DP 695x695/315



For connection of the square ceiling diffusers DP to round air ducts

- Casing material: Galvanized steel

	Unit of measurement	Ab DP 695x695/315
Connected air duct size	mm	315
Weight	kg	8.04

Dimensions

l	h	ØD	K
583.6	583.6	315	648.6

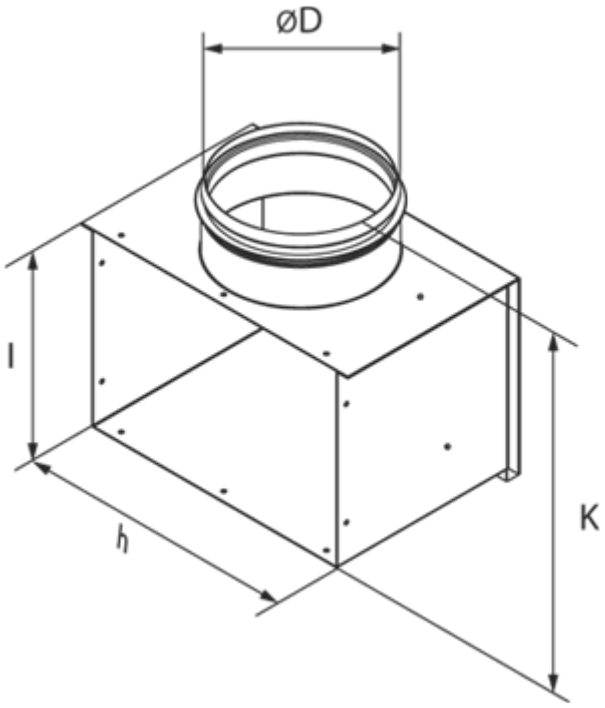
ØD
l
h
K