# Ab DP 795x795/315



For connection of the square ceiling diffusers DP to round air ducts

- Casing material: Galvanized steel

| | Unit of measurement | Ab DP 795x795/315 |
|---|---|---|
| Connected air duct size | mm | 315 |
| Weight | kg | 9.88 |

## Dimensions

| l | h | ØD | K |
|---|---|---|---|
| 683.6 | 683.6 | 315 | 748.6 |

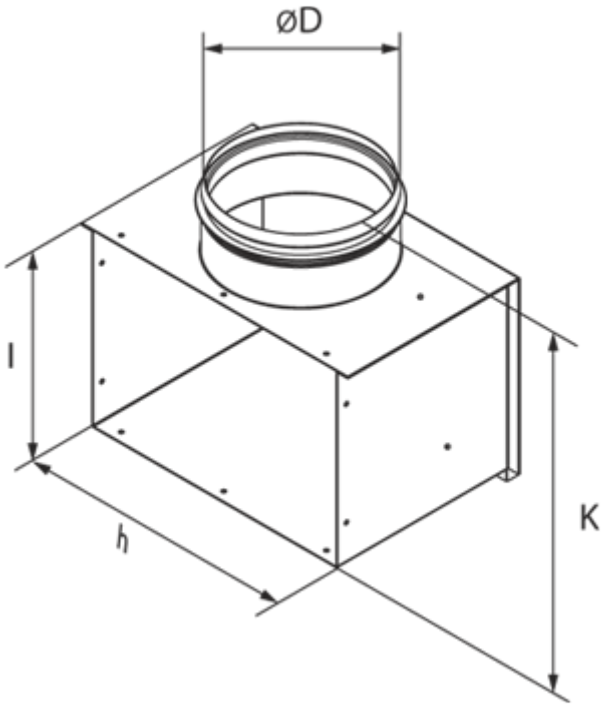
ØD
l
h
K