# Ab DVP/DVK 395x395/200

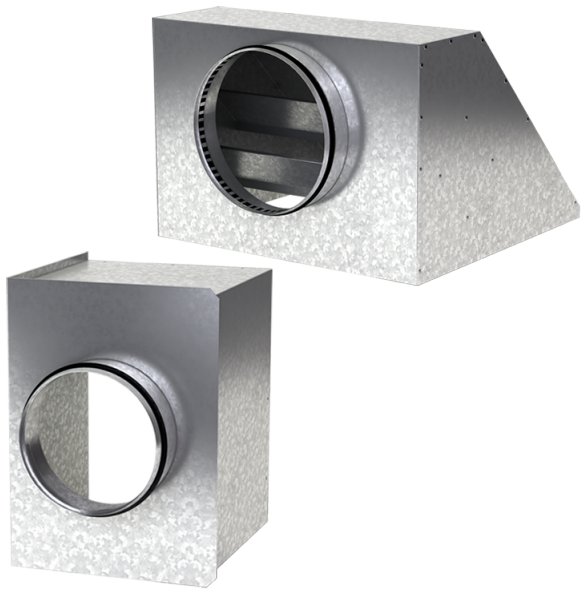

For connection of the square ceiling diffusers DVP and DVK to round air ducts

- Casing material: Galvanized steel

| | Unit of measurement | Ab DVP/DVK 395x395/200 |
|---|---|---|
| Connected air duct size | mm | 200 |
| Weight | kg | 2.52 |

## Dimensions

| a | b | ØD | K |
|---|---|---|---|
| 392.6 | 392.6 | 200 | 447 |

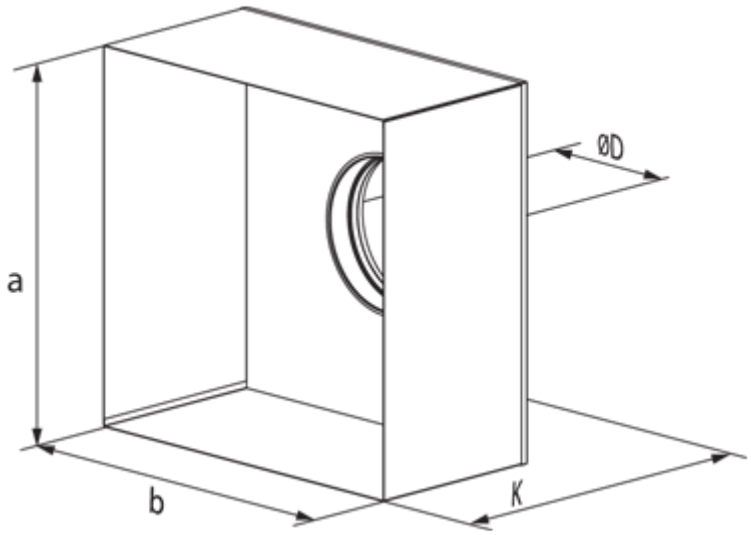
ØD
a
b
K