Ab DVP/DVK 620x620/315

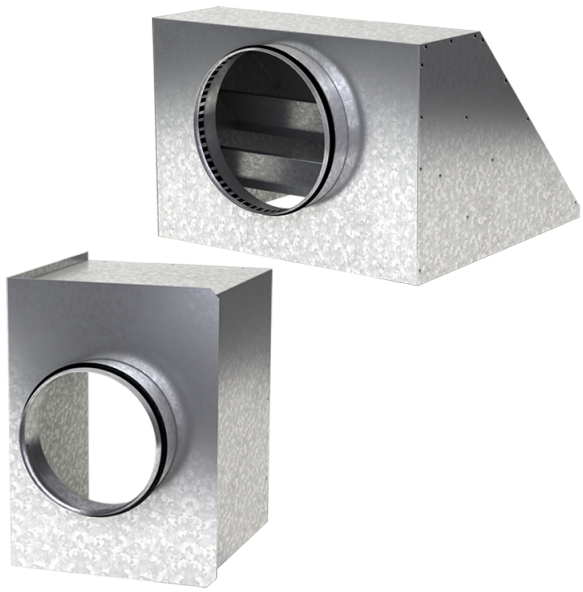

For connection of the square ceiling diffusers DVP and DVK to round air ducts

- Casing material: Galvanized steel

	Unit of measurement	Ab DVP/DVK 620x620/315
Connected air duct size	mm	315
Weight	kg	5.89

Dimensions

a	b	ØD	K
617.6	617.6	315	672

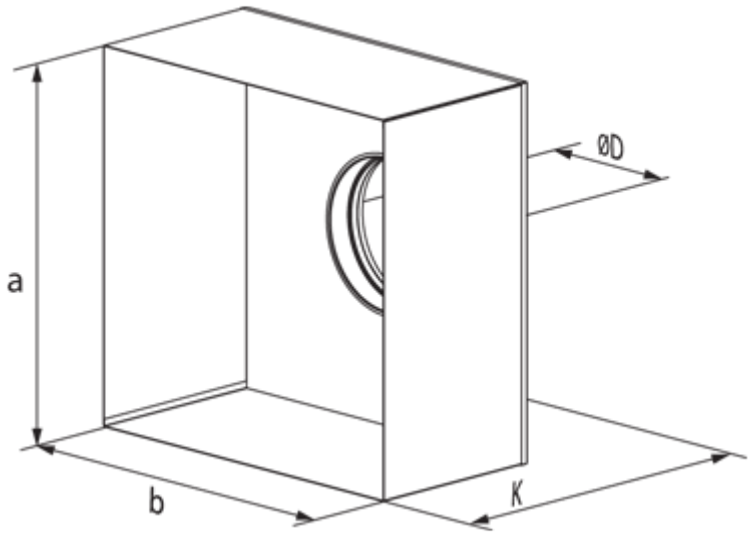
ØD
a
b
K