Ab DVP/DVK 795x795/315

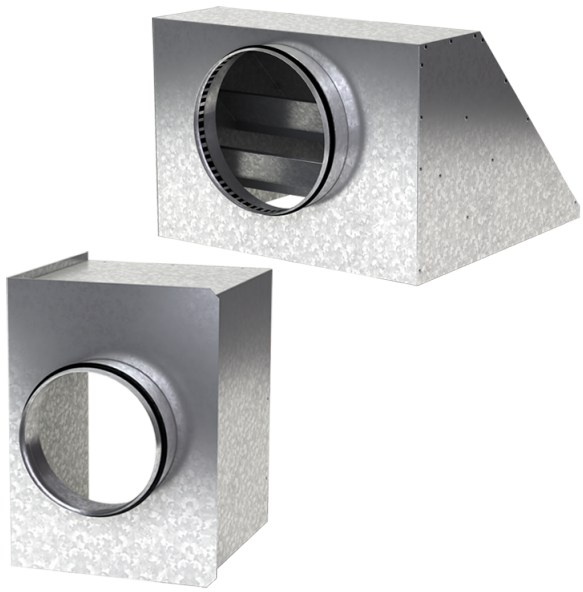

For connection of the square ceiling diffusers DVP and DVK to round air ducts

- Casing material: Galvanized steel

	Unit of measurement	Ab DVP/DVK 795x795/315
Connected air duct size	mm	315
Weight	kg	8.13

Dimensions

a	b	ØD	K
792.6	792.6	315	847

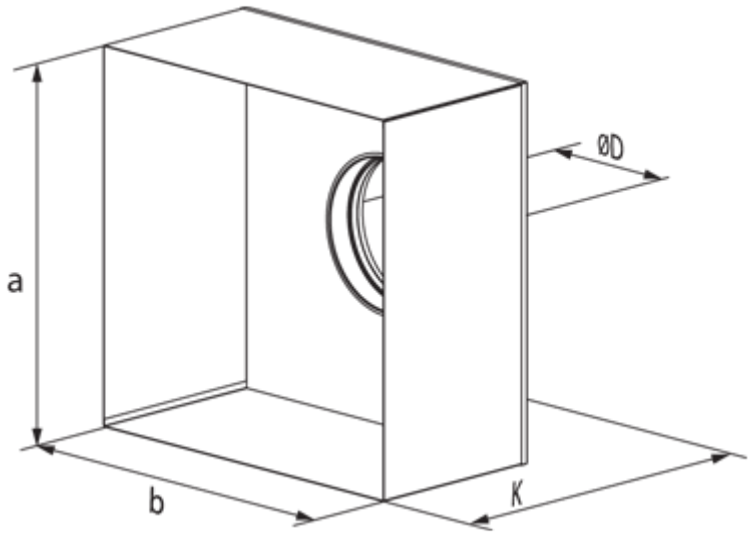
ØD
a
b
K