AOE 12



Air heating units with electric heaters for air heating of various premises

- Sound pressure level LpA at 3 m: 55
- Casing material: Coated steel

	Unit of measurement	AOE 12
Phases	-	3
Minimum supply voltage	V	400
Maximum supply voltage	V	400
Power supply frequency	Hz	50
Rated power	W	140
Unit current	A	0.61
Maximum airflow	m^3/h	2300
Rotation speed at 50hz	-	1420
Sound pressure level LpA at 3 m	dB(A)	55
Weight	kg	32
Ingress protection rating	-	IP21

Dimensions

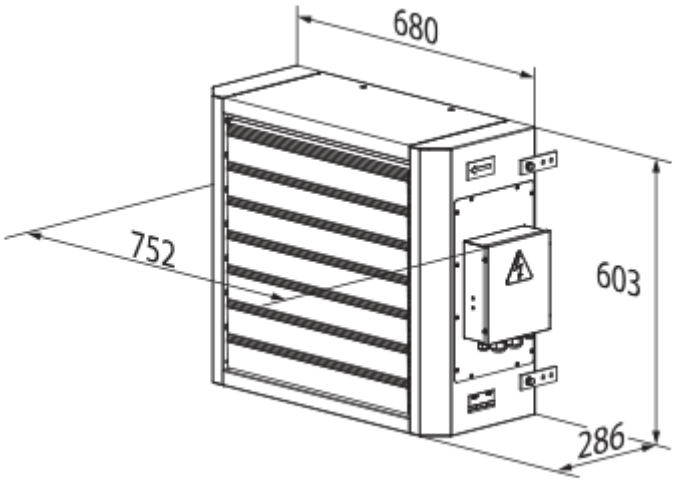

Accessories

Temperature regulators

Name	Photo	Description
TST-1-300		Temperature regulator
TSTD-1-300		Temperature regulator
RTS-1-400		Temperature regulator
RTSD-1-400		Temperature regulator

Other accessories

Name	Photo	Description
UET-15D		Control unit
MKP-AOW		Mounting angles
MK-AOW 25		Mounting brackets