AOE 30



Air heating units with electric heaters for air heating of various premises

- Sound pressure level LpA at 3 m: 61
- Casing material: Coated steel

	Unit of measurement	AOE 30
Phases	-	3
Minimum supply voltage	V	400
Maximum supply voltage	V	400
Power supply frequency	Hz	50
Rated power	W	253
Unit current	A	1.1
Maximum airflow	m³/h	4000
Rotation speed at 50hz	-	1480
Sound pressure level LpA at 3 m	dB(A)	61
Weight	kg	48
Ingress protection rating	-	IP21

Dimensions

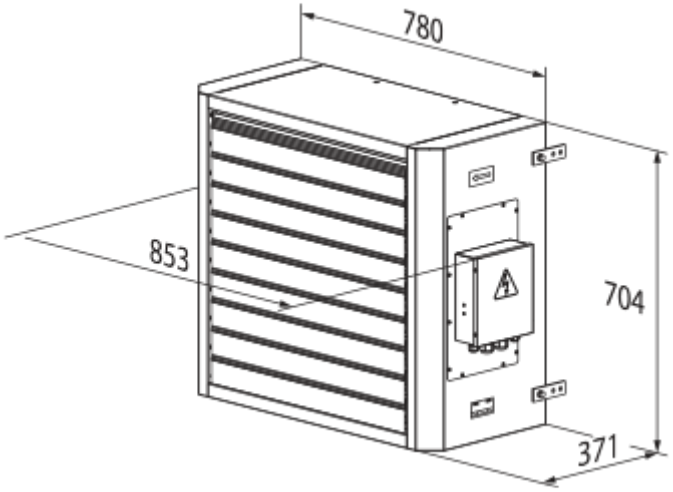

Accessories

Temperature regulators

Name	Photo	Description
TST-1-300		Temperature regulator
TSTD-1-300		Temperature regulator
RTS-1-400		Temperature regulator
RTSD-1-400		Temperature regulator

Other accessories

Name	Photo	Description
UET-30D		Control unit
MKP-AOW		Mounting angles
MK-AOW 45		Mounting brackets