Av DVP/DVK 295x295/125

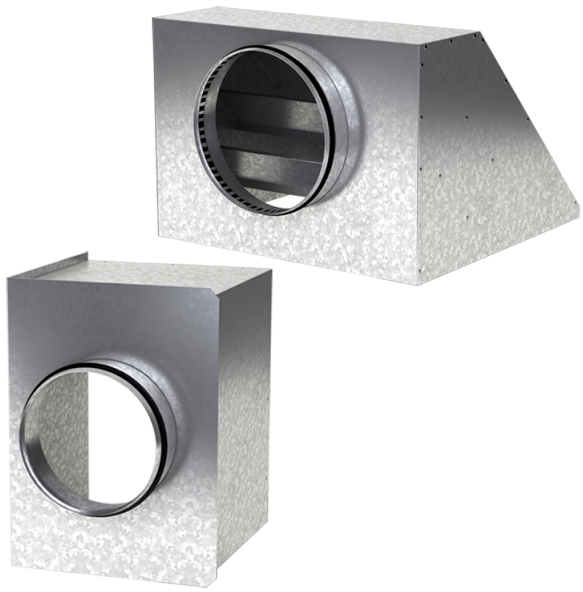

For connection of the square ceiling diffusers DVP and DVK to round air ducts

- Casing material: Galvanized steel

	Unit of measurement	Av DVP/DVK 295x295/125
Connected air duct size	mm	125
Weight	kg	1.88

Dimensions

a	b	ØD	K
292.6	292.6	125	305.5

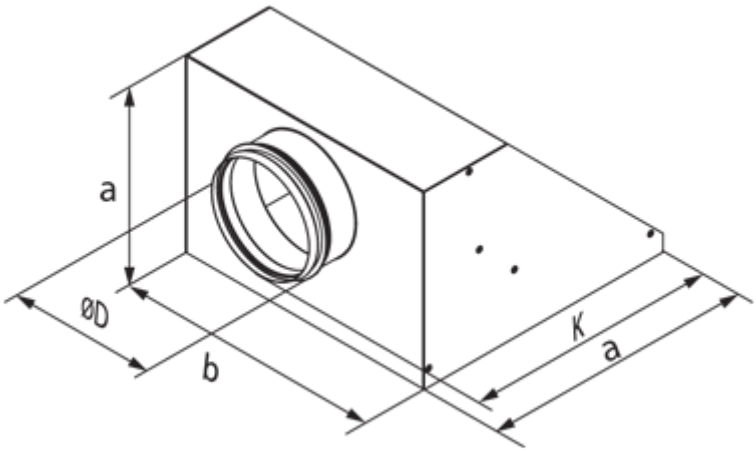
a
ØD
b
K
a