# Av DVP/DVK 305x305/125

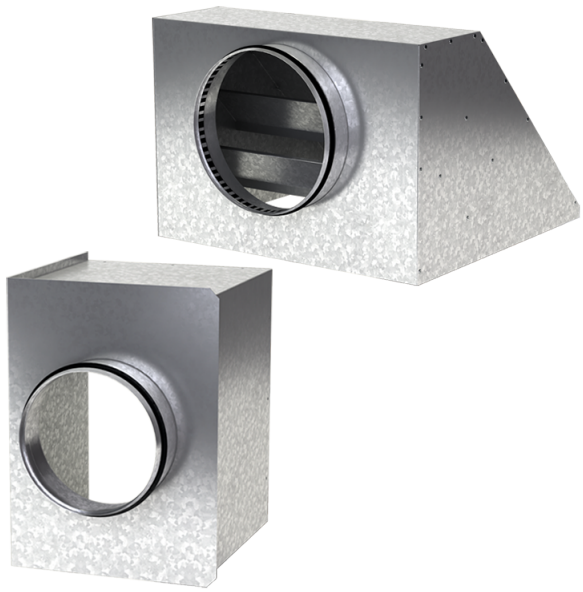

For connection of the square ceiling diffusers DVP and DVK to round air ducts

• Casing material: Galvanized steel

| | Unit of measurement | Av DVP/DVK 305x305/125 |
|---|---|---|
| Connected air duct size | mm | 125 |
| Weight | kg | 1.96 |

## Dimensions

| a | b | ØD | K |
|---|---|---|---|
| 302.6 | 302.6 | 125 | 305.5 |

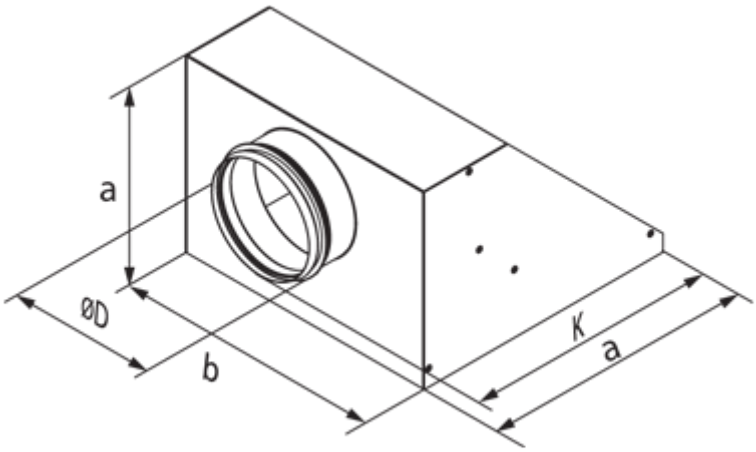
a
ØD
b
K
a