Av DVP/DVK 305x305/140

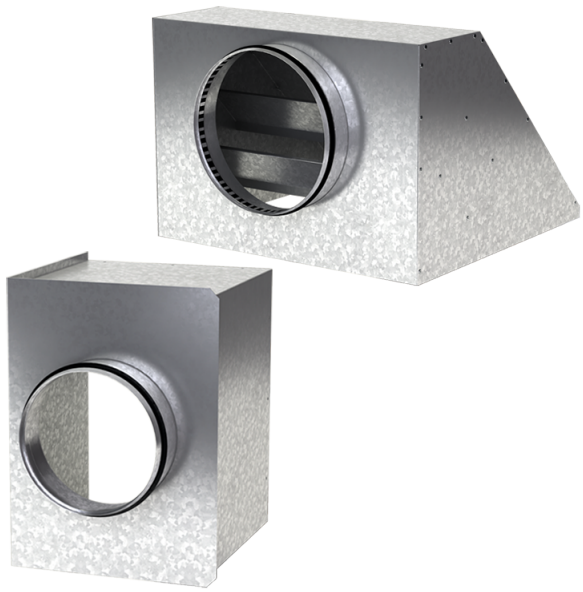

For connection of the square ceiling diffusers DVP and DVK to round air ducts

- Casing material: Galvanized steel

	Unit of measurement	Av DVP/DVK 305x305/140
Connected air duct size	mm	140
Weight	kg	1.96

Dimensions

a	b	ØD	K
302.6	302.6	140	305.5

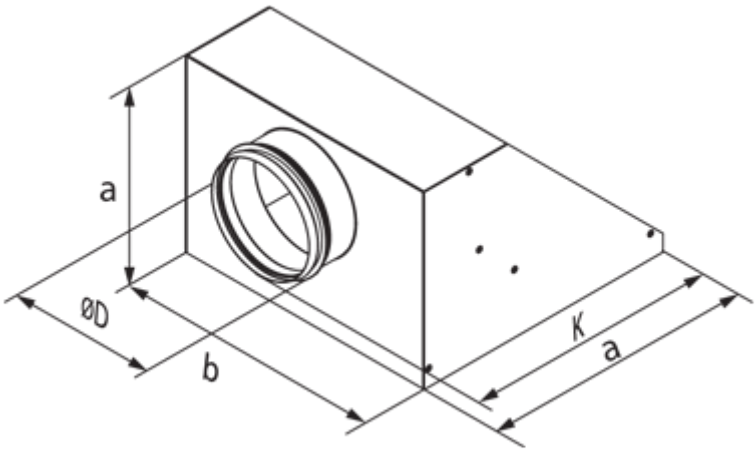
a
ØD
b
K
a