Av DVP/DVK 395x395/160

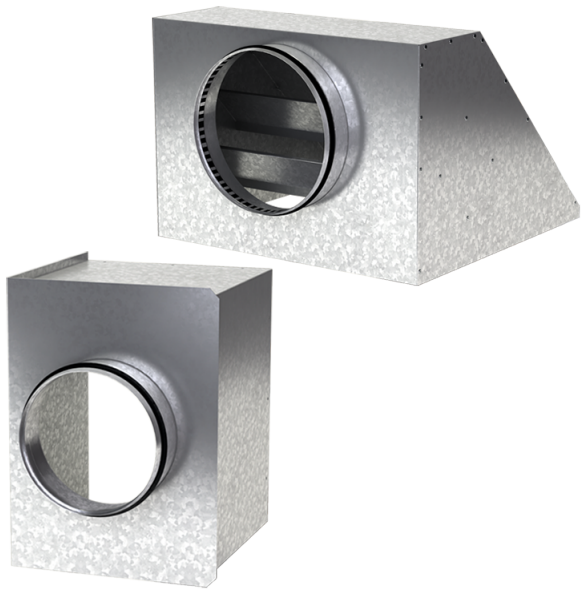

For connection of the square ceiling diffusers DVP and DVK to round air ducts

- Casing material: Galvanized steel

	Unit of measurement	Av DVP/DVK 395x395/160
Connected air duct size	mm	160
Weight	kg	2.69

Dimensions

a	b	ØD	K
392.6	392.6	160	305.5

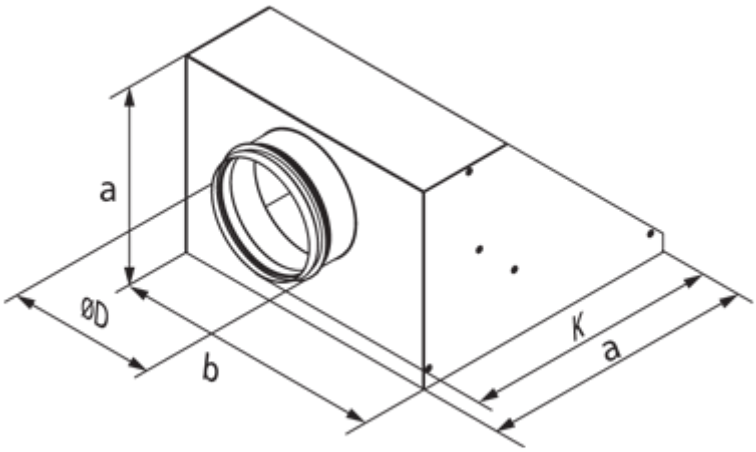
a
ØD
b
K
a