Av DVP/DVK 445x445/200

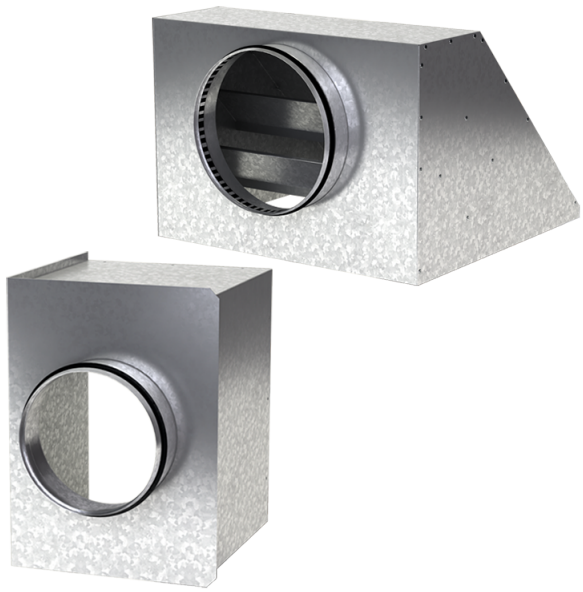

For connection of the square ceiling diffusers DVP and DVK to round air ducts

- Casing material: Galvanized steel

	Unit of measurement	Av DVP/DVK 445x445/200
Connected air duct size	mm	200
Weight	kg	3.1

Dimensions

a	b	ØD	K
442.6	442.6	200	305.5

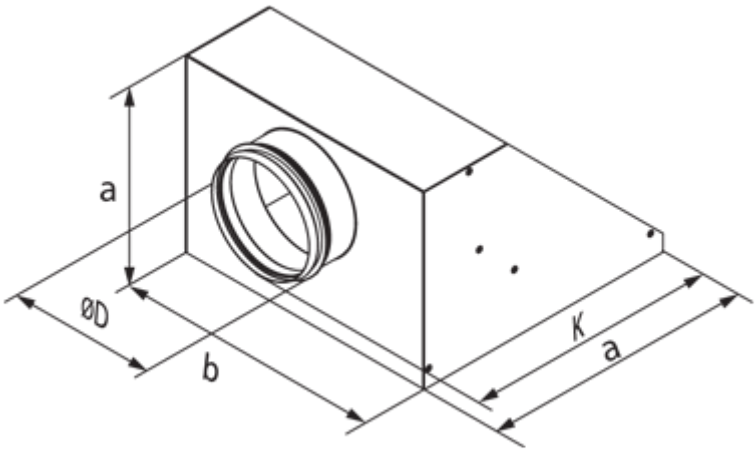
a
ØD
b
K
a