Av DVP/DVK 495x495/250

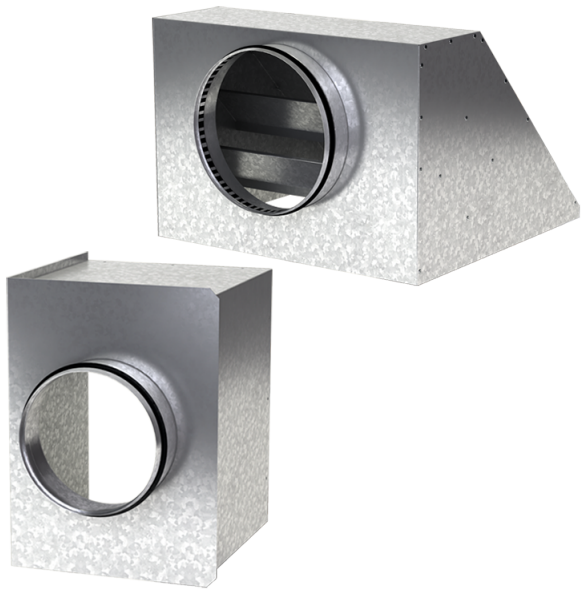

For connection of the square ceiling diffusers DVP and DVK to round air ducts

- Casing material: Galvanized steel

	Unit of measurement	Av DVP/DVK 495x495/250
Connected air duct size	mm	250
Weight	kg	3.55

Dimensions

a	b	ØD	K
492.6	492.6	250	305.5

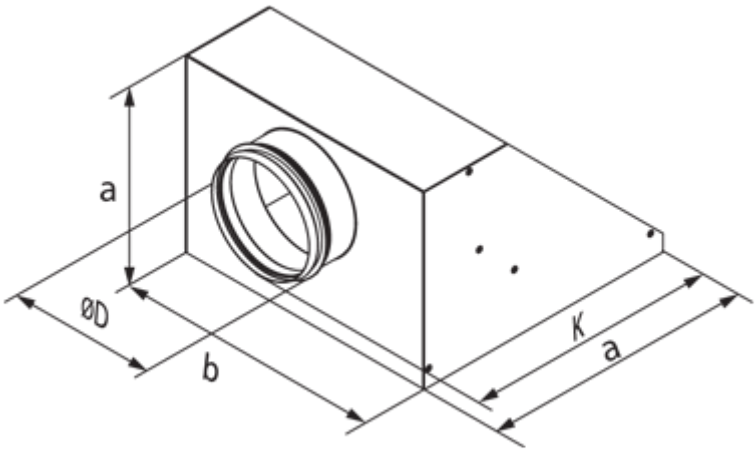
a
ØD
b
K
a